Polo 1995 ➤

Diesel injection and glow plug system

Engine ID	AEF								

Edition 10.1995

Protected by copyright. Copying for private or commercial purposes, in part or in whole, is not permitted unless authorised by Volkswagen AG. Volkswagen AG does not guarantee or accept any liability with respect to the correctness of information in this document. Copyright by Volkswagen AG.

satelettronica

List of Workshop Manual Repair GroupsList of Workshop Manual Repair GroupsList of Workshop Manual Repair Groups

Polo 1995 ➤

Diesel injection and glow plug system

Protected by copyright. Copying for private or commercial purposes, in part or in whole, is not permitted unless authorised by Volkswagen AG. Volkswagen AG does not guarantee or accept any liability with respect to the correctness of information in this document. Copyright by Volkswagen AG.

Repair Group

01 - Self diagnosis

23 - Mixture preparation, Injection

28 - Glow plug system

satelettronica

Technical information should always be available to the foremen and mechanics, because their careful and constant adherence to the instructions is essential to ensure vehicle road-worthiness and safety. In addition, the normal basic safety precautions for working on motor vehicles must, as a matter of course, be observed.

All rights reserved.
No reproduction without prior agreement from publisher.

Copyright © 2010 Volkswagen AG, Wolfsburg

00050205820

Contents

01 - Self diagnosis . . . 1

1 Self diagnosis . . . 1
1.1 Self diagnosis . . . 1
1.2 Function . . . 1
1.3 Technical data of self diagnosis . . . 1
1.4 Connecting fault reader V.A.G 1551 and selecting engine electronics control unit . . . 2
1.5 Interrogating fault memory . . . 3
1.6 Fault table . . . 4
1.7 Erasing fault memory . . . 6
1.8 Final control diagnosis . . . 7
1.9 Reading measured value block . . . 10

23 - Mixture preparation, Injection . . . 12

1 Servicing fuel injection system . . . 12
1.1 Servicing fuel injection system . . . 12
1.2 Safety precautions . . . 12
1.3 Rules for cleanliness . . . 12
1.4 Fitting locations overview . . . 13
1.5 Servicing injection pump . . . 15
1.6 Servicing fuel filter . . . 21
1.7 Removing and installing injection pump . . . 23
1.8 Checking and adjusting injection pump timing . . . 30
1.9 Checking valve timing . . . 33
1.10 Checking and adjusting idling speed, idling speed boost and governed speed . . . 35
1.11 Idling speed boost actuator . . . 36
1.12 Checking idling speed boost actuator . . . 36
1.13 Removing and installing injectors . . . 37
1.14 Servicing injectors . . . 38
1.15 Checking injector nozzle valve tip for damage, injection pressure and for leakage. . . . 39
1.16 Checking load signal potentiometer . . . 40
1.17 Checking commencement of injection valve . . . 42
1.18 Checking full throttle stop valve . . . 43
1.19 Checking idling speed boost valve . . . 44
1.20 Checking engine temperature sender . . . 44
1.21 Resistance figures for engine temperature sender . . . 47
1.22 Vacuum hose connection diagram . . . 47

28 - Glow plug system . . . 49

1 Checking glow plug system . . . 49
1.1 Checking glow plug system . . . 49
1.2 Checking glow plug current consumption . . . 49
1.3 Checking glow plugs . . . 50
1.4 Glow plugs with burned electrodes . . . 50

Copyright by Volkswagen AG. Protected by copyright. Copying for private or commercial purposes, in part or in whole, is not permitted unless authorised by Volkswagen AG. Volkswagen AG does not guarantee or accept any liability with respect to the correctness of information in this document.
satelettronica

Protected by copyright. Copying for private or commercial purposes, in part or in whole, is not permitted unless authorised by Volkswagen AG. Volkswagen AG does not guarantee or accept any liability with respect to the correctness of information in this document. Copyright by Volkswagen AG.

satelettronica

01 - Self diagnosis

1 - Self diagnosis

1.1 - Self diagnosis

1.2 - Function

The control unit (J179) for the automatic glow period is equipped with a fault memory.

If faults occur in the sensors and components being monitored, they will be stored in the fault memory together with an indication of the type of fault.

The faults stored can be read-out with the fault reader V.A.G 1551 or the vehicle system tester V.A.G 1552 => Page 3 .

The fault memory must be erased after the faults has been eliminated => Page 3 .

Faults which can be attributed to a temporary open circuit in the wiring or a loose contact, will also be stored. These faults will be displayed as sporadic faults "SP".

An electrical fault in the glow plug circuit is indicated during the extended glow period (approx. 3 minutes) by the glow period warning lamp flashing.

Note:

General information for self-diagnosis is in the fault reader V.A.G 1551 and the vehicle system tester V.A.G 1552 instruction manuals.

1.3 - Technical data of self diagnosis

Equipped with

- The data transfer between control unit and fault reader V.A.G 1551 or vehicle system tester V.A.G 1552 is carried out in the operating mode "Rapid data transfer".
- The fault memory is equipped with a non-volatile memory.

Selectable functions

Function	Ignition switched on	Engine idling
02 Interrogate fault memory	x	x
03 Final control diagnosis	x	x
05 Erase fault memory	x	x
06 End output	x	x
08 Read measured value block	x	x

Protected by copyright. Copyright for private or commercial purposes, partly or wholly is not permitted unless authorised by Volkswagen AG. Volkswagen AG does not guarantee or accept any liability with respect to the correctness of information in this document. Copyright by Volkswagen AG.
satelettronica

1.4 - Connecting fault reader V.A.G 1551 and selecting engine electronics control unit

Special tools, testers and auxiliary items

- Fault reader V.A.G 1551 with cable V.A.G 1551/3

Note:

The vehicle system tester V.A.G 1552 can be used instead of the fault reader V.A.G 1551, however a print-out is not possible.

Test conditions

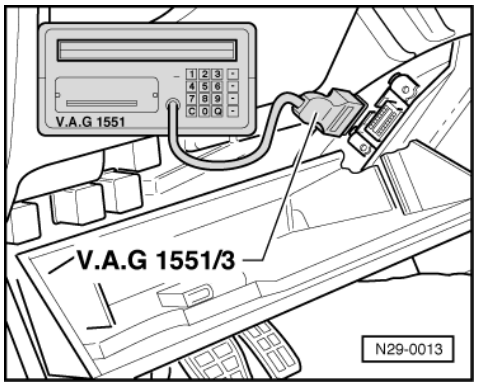

- Battery voltage OK.
- Fuse 21 OK.
- Earth connections on engine and gearbox OK.

Work sequence

- -> Fold down left shelf.
- Connect fault reader (or vehicle system tester) with cable V.A.G 1551/3.

-> Indicated on display:

```
V.A.G - SELF DIAGNOSIS     HELP
     1 - Rapid data transfer*
     2 - Flash code output*
```

* Appears alternately

Note:

If the display remains blank:

=> Fault reader operating instructions

After the fault reader has been connected:

- Depending upon desired function:
  Switch ignition on
  or
  Start engine => Page 1 , Table "Selectable functions".
- Operate fault reader taking into account the information on the display:
- Press key 1 for "Rapid data transfer".
- Press keys 4 and 1 for address word "Diesel pump electronics" and confirm entry with Q key.

-> The fault reader V.A.G 1551 display will show the control unit identification, e.g.:

```
028906125A     N.A. Diesel FIA     V01
□
```

Protected copyright. Copyright by Volkswagen AG. Volkswagen AG does not guarantee or accept any liability with respect to the correctness of information in this document. Copying for private or commercial purposes, in part or in whole, is not permitted unless authorised by Volkswagen AG.
satelettronica

- 028906125A = Part No. of the control unit (for up-to-date control unit versions see parts catalogue)
- N.A. Diesel FIA =Engine version
- V01 = Control unit software version

- Press the ⇒key.

-> Indicated on display:

```
Rapid data transfer      HELP
Select function XX
```

- Further measures see repair procedures.

1.5 - Interrogating fault memory

Special tools, testers and auxiliary items

- Fault reader V.A.G 1551 with cable V.A.G 1551/3

Note:

The vehicle system tester V.A.G 1552 can be used instead of the fault reader V.A.G 1551, however a print-out is not possible.

Work sequence

- Connect fault reader V.A.G 1551 (V.A.G 1552) and with the "Address word" 41 select the Diesel pump electronics control unit. When doing this the engine should be idling.
  (Connecting fault reader and selecting engine electronics control unit => Page 2 .)

Only when engine does not start:

- Switch ignition on.

  Switch on fault reader printer with the print key. The warning lamp in key must light up.

-> Indicated on display:

```
Rapid data transfer      HELP
Select function XX
```

- Operate fault reader taking into account the information on the display:
- Press keys 0 and 2 for function "Interrogate fault memory" and confirm entry with Q key.

-> The number of faults stored or "No fault recognised!" will be shown on the display.

```
X Faults recognised!
```

If one or more faults are stored:

The stored faults will be displayed and printed out one after the other.

-> After the stored faults have been printed out, the display will show:

```
Rapid data transfer      HELP
Select function XX
```

- Eliminate the printed out faults using the appropriate fault table.
  => Page 4 .
- Afterwards erase fault memory => Page 6

satelettronica

If no fault is stored:

- Press the ⇒key.

-> Indicated on display:

```
Rapid data transfer      HELP
Select function XX
```

- Press keys 0 and 6 for the "End data transfer" function and confirm input with the Q key.

Note:

If the self-diagnosis has not detected a fault, use the appropriate fault table in "Fault finding engine" binder for further fault finding.

Copyright by Volkswagen AG. Volkswagen AG does not guarantee or accept any liability with respect to the correctness of information in this document. Copyright by Volkswagen AG. Printed for private or commercial purposes, in whole or in part, is not permitted unless authorised by Volkswagen AG.

1.6 - Fault table

Notes:

- The fault tables are listed according to the 5 digit fault code on the left.
- Explanation of the fault types (e.g. "open circuit/short circuit to earth"):

=> Fault reader operating instructions

- If components are indicated as faulty:
  First check the wiring and connectors to these components as well as the system earth connections according to current flow diagram. This is particularly relevant if faults are output as "occurring sporadically" (SP).

V.A.G 1551 print-out	Possible causes of fault	Possible effects	Fault remedy
00626 Glow period warning lamp - K29 Short to positive	- Wiring short to positive	- Warning lamp does not light during glow period	- Check K29 => Page 7, final control diagnosis
Open circuit/short to earth	- Wiring open circuit or short to earth - K29 defective		

V.A.G 1551 print-out	Possible causes of fault	Possible effects	Fault remedy
01050 Glow plug monitor Open circuit	- Open circuit in wire 16 to automatic glow period control unit (J179)	- Poor cold starting - Glow period warning lamp (K29) flashes	- Check wiring and connections according to current flow diagram.
Open circuit/short to earth	- Wiring open circuit or short to earth - Fuse -S125- defective - Relay contact open		- Check wiring and connections according to current flow diagram. If necessary replace fuse. If necessary replace glow plugs
Short to positive	- Wiring short to positive - Relay does not switch off	- Always pre-glows	- Check wiring and connections according to current flow diagram.

V.A.G 1551 print-out	Possible causes of fault	Possible effects	Fault remedy
01052			

satelettronica

Protected by copyright. Copying for private or commercial purposes, in part or in whole, is not permitted unless authorised by Volkswagen AG. Volkswagen AG does not guarantee or accept any liability with respect to the correctness of information in this document. Copyright by Volkswagen AG.

V.A.G 1551 print-out	Possible causes of fault	Possible effects	Fault remedy
Load signal potentiometer - G157			
Short to earth	- Wiring short to earth - G157 defective	- Automatic glow period control unit (J179) switches to emergency function - No exhaust gas recirculation - Idling speed too low when engine cold	- Check wiring and connections according to current flow diagram. Check G157 => Page 40
Open circuit/short to earth	- Wiring open circuit or short to earth	- Black exhaust smoke at altitudes above 1000 metres	
Short to positive	- Wiring short to positive		

V.A.G 1551 print-out	Possible causes of fault	Possible effects	Fault remedy
01167 Full throttle stop valve - N194			
Open circuit/short to positive	- Wiring open circuit or short to positive - N194 defective	- Slightly reduced performance	- Check N194 => Page 7 , final control diagnosis
Short to earth	- Wiring short to earth - N194 defective	- Black exhaust smoke at altitudes above 1000 metres	
01168 Idling speed boost valve - N177			
Short to positive	- Wiring short to positive - N177 defective	- Idling speed too high when engine warm	- Check N177, => Page 7 , final control diagnosis
Open circuit/short to earth	- Wiring open circuit - N177 defective	- Idling speed too high when engine warm	
	- Wiring short to earth	- Idling speed too low when engine cold	

V.A.G 1551 print-out	Possible causes of fault	Possible effects	Fault remedy
01169 Door contact switch driver's side -F2			
Open circuit/short to positive	- Wiring open circuit or short to positive - F2 defective	- Glow period system will not activate by opening and closing the driver's door	- Check wiring and connections according to current flow diagram. - Renew F2 if necessary.
Short to earth	- Wiring short to earth - F2 defective		
01204 Engine temperature sender - G27-			
Short to earth	- Wiring short to earth - G27 defective	- No pre-glow - No idling speed increase when engine cold	- Check G27 =>Page 44
Open circuit/short to positive	- Wiring open circuit or short to positive - G27 defective	- Always pre-glows	

V.A.G 1551 print-out	Possible causes of fault	Possible effects	Fault remedy
01209 Alternator speed signal terminal W			

satelettronica

V.A.G 1551 print-out	Possible causes of fault	Possible effects	Fault remedy
No signal	- Wiring open circuit	- Automatic glow period control unit (J179) switches to emergency function - No exhaust gas recirculation - Idling speed too low when engine cold	- Check wiring and connections according to current flow diagram. Check alternator => Current flow diagrams, Electrical fault finding and Fitting locations binder

V.A.G 1551 print-out	Possible causes of fault	Possible effects	Fault remedy
01265 Exhaust gas recirculation valve -N18-			
Short to positive	Wiring short to positive -N18 defective	- No exhaust gas recirculation - Increased emissions	- Check N18, => Page 7 , final control diagnosis
Open circuit/short to earth	- Wiring open circuit - N18 defective		
	- Wiring short to earth	- Exhaust gas always recirculating - Black exhaust smoke - Increased emissions - Slightly reduced performance	

V.A.G 1551 print-out	Possible causes of fault	Possible effects	Fault remedy
01266 Glow plug relay -J52 Short to positive	- Wiring short to positive - J52 defective	- No glow period - Poor cold starting - Glow period warning lamp (K29) flashes	- Check J52 =>Page 7 , final control diagnosis
Open circuit/short to earth	- Wiring open circuit or short to earth - J52 defective		

V.A.G 1551 print-out	Possible causes of fault	Possible effects	Fault remedy
01269 Commencement of injection valve -N108			
Open circuit/short to positive	- Wiring open circuit or short to positive - N108 defective	- Coarse engine running or diesel knock when engine warm	- Check N108, => Page 7 , final control diagnosis
Short to earth	- Wiring short to earth - N108 defective	- Misfiring and/or blue smoke when engine is cold	

1.7 - Erasing fault memory

Special tools, testers and auxiliary items

- Fault reader V.A.G 1551 or vehicle system tester V.A.G 1552 with cable V.A.G 1551/3

Test conditions

- Fault eliminated

satelettronica

Note:

After eliminating faults the fault memory must be interrogated again as follows and then erased.

Work sequence

- Connect fault reader V.A.G 1551 (V.A.G 1552) and with the "Address word" 41 select the Diesel pump electronics control unit. When doing this the engine should be idling.
  (Connecting fault reader and selecting engine electronics control unit => Page 2 .)

-> Indicated on display:

```
Rapid data transfer      HELP
Select function XX
```

- Press keys 0 and 2 for function "Interrogate fault memory" and confirm entry with Q key.

```
Rapid data transfer      HELP
Select function XX
```

-> Press ⇒key until all faults still stored have appeared and the display reads:

- Press keys 0 and 5 for the function "Erase fault memory" and confirm entry with Q key.

-> Indicated on display:

```
Rapid data transfer
Fault memory is erased!
```

- If the fault memory will not erase there is a fault still in the system and this must be rectified.
- Press the ⇒key.

-> Indicated on display:

```
Rapid data transfer      HELP
Select function XX
```

- Press keys 0 and 6 for the "End data transfer" function and confirm input with the Q key.
- Carry out a road test and interrogate fault memory again. No faults must be displayed.

1.8 - Final control diagnosis

Special tools, testers and auxiliary items

- Fault reader V.A.G 1551 or vehicle system tester V.A.G 1552 with cable V.A.G 1551/3
- Diode test lamp V.A.G 1527
- Adapter set V.A.G 1594
- Current flow diagram

The final control diagnosis activates the following components in the stated sequence:

1. Exhaust gas recirculation valve (N18)

2. Glow period warning lamp (K29)

3. Glow plug relay (J52)

4. Full throttle stop valve (N194)

5. Idling speed boost valve (N177)

6. Commencement of injection valve (N108)

Copyright by Volkswagen AG. Volkswagen AG does not guarantee or accept any liability with respect to the correctness of information in this document. Copyright by Volkswagen AG. Protected by copyright. Copying for private or commercial purposes, in part or in whole, is not permitted unless authorised by Volkswagen AG.
satelettronica

Notes:

- The final control diagnosis can be carried out with the engine stationary or running. As the clicking of the valves when being activated can be heard better with the engine stationary. it should be carried out with the engine stationary.
- The ignition must be switched off before repeating the final control diagnosis.

Work sequence

- Connect the fault reader V.A.G 1551 (V.A.G 1552) and with ignition switched on select Diesel pump electronics control unit using the "Address word" 41.
  (Connecting fault reader and selecting engine electronics control unit => Page 2 .)

-> Indicated on display:

```
Rapid data transfer      HELP
Select function XX
```

- Operate fault reader taking into account the information on the display.
- Press keys 0 and 3 for the function "Final control diagnosis".

-> Indicated on display:

```
Rapid data transfer      Q
03 Final control diagnosis
```

- Confirm input with Q key.

-> Indicated on display:

```
Final control diagnosis
Exhaust gas recirculation valve -N18
```

The valve will be activated and must click once.

- Press the ⇒key.

-> Indicated on display:

```
Final control diagnosis
Exhaust gas recirculation valve -N18
```

Valve activation will be switched off and the valve must again click once.

Valve does not click:

- Check exhaust gas recirculation:

=> Repair group 26; Exhaust gas recirculation system; Checking exhaust gas recirculation Exhaust gas recirculation system Checking exhaust gas recirculation

- Press the ⇒key.

-> Indicated on display:

```
Final control diagnosis
Glow period warning lamp -K29
```

The warning lamp must light up.

Warning lamp does not light up:

- Check glow period warning lamp:

=> Current flow diagrams, Electrical fault finding and Fitting locations binder

- Press the ⇒key.

satelettronica

-> Indicated on display:

```
Final control diagnosis
Glow period warning lamp -K29
```

The warning lamp must go out.

- Press the ⇒key.

-> Indicated on display:

```
Final control diagnosis
Glow plug relay -J52
```

The glow period is switched on and the relay must click once

- As a check the diode test lamp V.A.G 1527can be connected to the glow plug feed wire. LED must light up.
- Press the ⇒key.

-> Indicated on display:

```
Final control diagnosis
Glow plug relay -J52
```

The glow period is switched off and the relay must again click once or LED must go out.

If the relay does not click:

- Check glow plug system:

=> Current flow diagrams, Electrical fault finding and Fitting locations binder

- Press the ⇒key.

-> Indicated on display:

```
Final control diagnosis
Full throttle stop valve -N194
```

The valve will be activated and must click once.

- Press the ⇒key.

-> Indicated on display:

```
Final control diagnosis
Full throttle stop valve -N194
```

Valve activation will be switched off and the valve must again click once.

Valve does not click:

- Check wiring and connections according to current flow diagram.
- Check full throttle stop valve => Page 44
- Press the ⇒key.

-> Indicated on display:

```
Final control diagnosis
Idling speed boost valve -N177
```

The valve will be activated and must click once.

- Press the ⇒key.

-> Indicated on display:

Protected by copyright. Copyright by Volkswagen AG. Volkswagen AG does not guarantee or accept any liability with respect to the correctness of information in this document. Copyright by Volkswagen AG. Protected by copyright. Copying for private or commercial purposes, in part or in whole, is not permitted unless authorised by Volkswagen AG.
satelettronica

```
Final control diagnosis
Idling speed boost valve -N177
```

Valve activation will be switched off and the valve must again click once.

Valve does not click:

- Check wiring and connections according to current flow diagram.
- Check idling speed boost valve => Page 44
- Press the ⇒key.

-> Indicated on display:

```
Final control diagnosis
Commencement of injection valve -N108
```

The valve will be activated and must click once.

- Press the ⇒key.

-> Indicated on display:

```
Final control diagnosis
End output
```

Valve activation is switched off and the valve must again click once.

Valve does not click:

- Check wiring and connections according to current flow diagram.
- Check commencement of injection valve => Page 42 .
- Press the ⇒key.

-> Indicated on display:

```
Function is not known
or cannot be performed at the moment
```

- Press the ⇒key.

-> Indicated on display:

```
Rapid data transfer     HELP
Select function XX
```

- Press keys 0 and 6 for the "End data transfer" function and confirm input with the Q key.
- Switch off ignition.

1.9 - Reading measured value block

The measured values in the reading measured value block functions are described during the individual component test. Currently only the following values can be interrogated in display group 01:

	Display zones			
	1	2	3	4
Display group 01				
Display	xxxx rpm	x.xxx V	xxx °C	

Protected by copyright. Copyright by Volkswagen AG. Volkswagen AG does not guarantee or accept any liability with respect to the correctness of information in this document. Copyright by Volkswagen AG. Copying for private or commercial purposes, in part or in whole, is not permitted unless authorised by Volkswagen AG.
satelettronica

	Display zones			
Indicated	Engine speed1)	Load signal potentiometer voltage	Coolant temperature	

1) The indicated engine speed does not correspond to the actual engine speed

Protected by copyright. Copying for private or commercial purposes, in part or in whole, is not permitted unless authorised by Volkswagen AG. Volkswagen AG does not guarantee or accept any liability with respect to the correctness of information in this document. Copyright by Volkswagen AG.
satelettronica

23 - Mixture preparation, Injection

1 - Servicing fuel injection system

1.1 - Servicing fuel injection system

Notes:

- The control unit for the automatic glow period (J179) is equipped with a fault memory. Before carrying out repairs and fault finding the fault memory must be interrogated and final control diagnosis performed
- During some checks it can happen that the control unit will recognise and store a fault. Therefore after completing all checks and repairs the fault memory must be interrogated and if necessary erased.
  => Page 3 , interrogating fault memory
- Always renew spring-type hose clips with screw-type hose clips.

Safety precautions =>Page 12

Rules for cleanliness => Page 12

1.2 - Safety precautions

To prevent injuries to persons and/or damage to the injection and glow plug system, the following must be noted:

- The ignition must be switched off before connecting or disconnecting injection or glow plug system wiring or tester cables.
- Before disconnecting battery, obtain radio code for radios fitted with anti-theft coding.
- Disconnecting and connecting the battery must only be undertaken when the ignition is switched off otherwise the automatic glow period control unit may be damaged.

1.3 - Rules for cleanliness

When working on the fuel supply/injection system, pay careful attention to the following "5 rules":

- Thoroughly clean all unions and the adjacent areas before disconnecting.
- Place parts that have been removed on a clean surface and cover. Do not use fluffy cloths!
- Carefully cover opened components or seal, if the repair cannot be carried out immediately.
- Only install clean components:
  Only unpack replacement parts immediately prior to installation.
  Do not use parts that have been stored loose (e.g. in tool boxes etc.).
- When the system is open:
  Do not work with compressed air if this can be avoided.
  Do not move vehicle unless absolutely necessary.
- Also ensure that no Diesel fuel runs onto the coolant hoses. If necessary hoses must be cleaned immediately. Affected hoses must be replaced.

Protected by copyright. Copying for private or commercial purposes, in part or in whole, is not permitted unless authorised by Volkswagen AG. Volkswagen AG does not guarantee or accept any liability with respect to the correctness of information in this document. Copyright by Volkswagen AG.
satelettronica

1.4 - Fitting locations overview

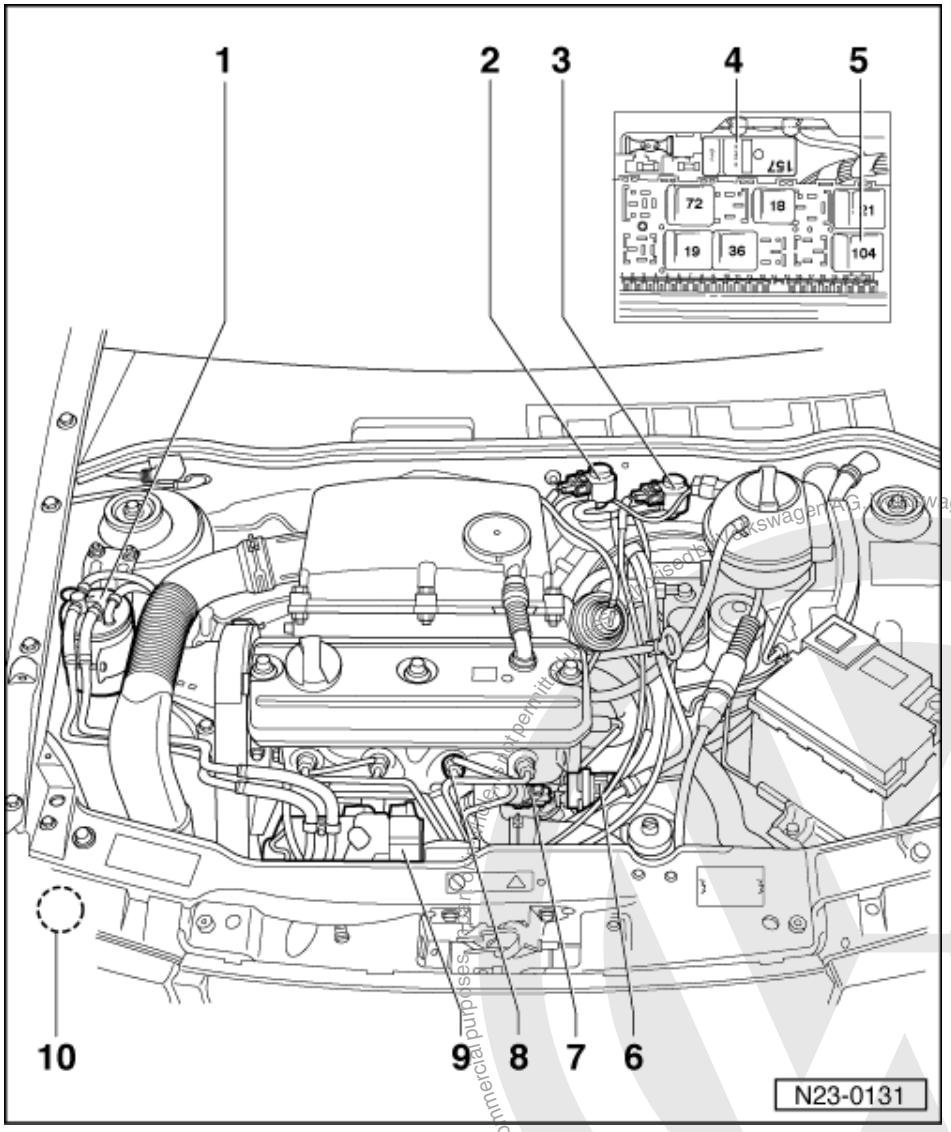

1 Fuel filter
2 Exhaust gas recirculation valve (N18)
- Activated charcoal filter system

=> Repair group 26; Exhaust gas recirculation system Exhaust gas recirculation system

3 Idling speed boost valve (N177)
4 Automatic glow period control unit (J179)
- Location: above relay plate

5 Glow plug relay (J52)
- Location: on relay plate

6 Multi-pin connector

Protected by copyright. Copying for private or commercial purposes, in part, is not permitted unless authorised by Volkswagen AG. Volkswagen AG does not guarantee or accept any liability with respect to the correctness of information in this document. Copyright by Volkswagen AG.
satelettronica

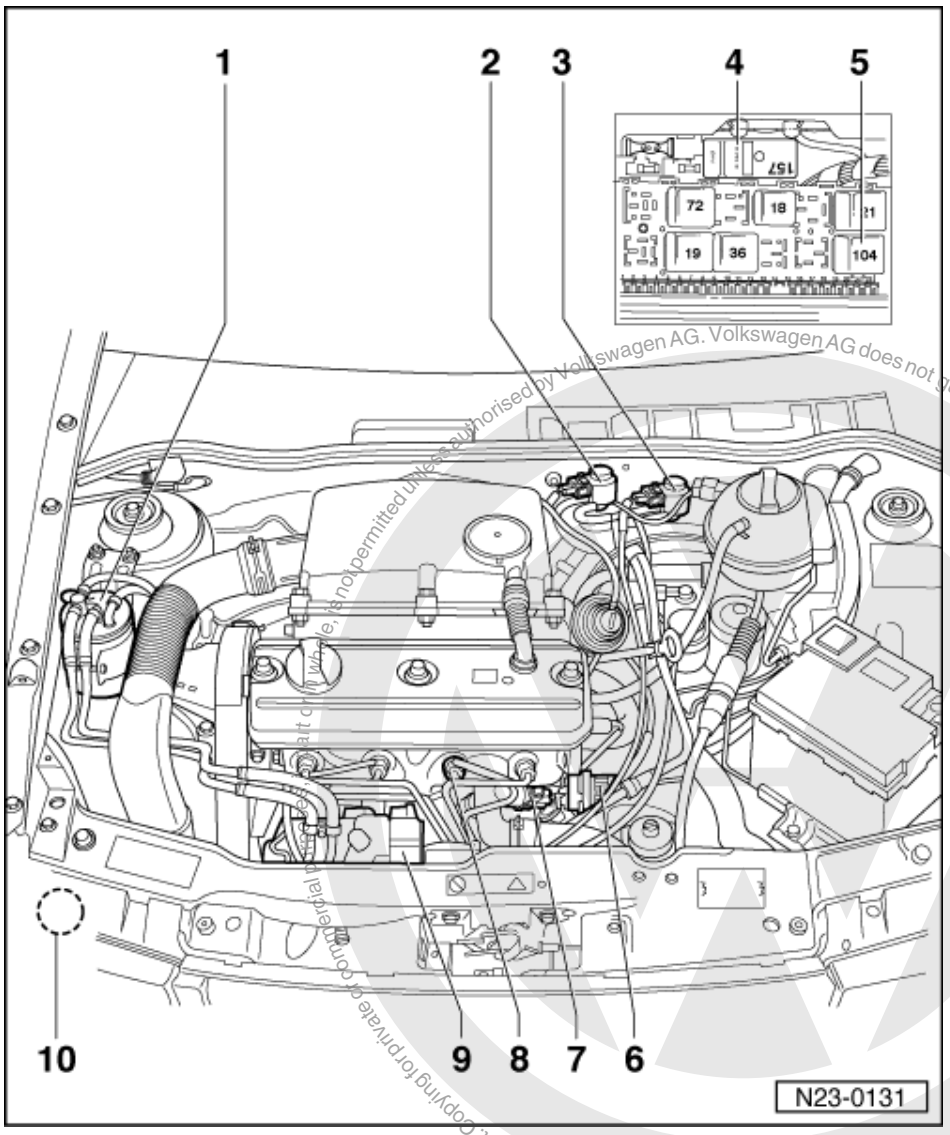

7 Engine temperature sender (G27)
- With coolant temperature gauge sender (G2)

8 Injector

9 Injection pump
- Attaching components => Page 15

10 Air cleaner
- Location: in front right wheel housing

Protected by copyright. Copying for private or commercial purposes, in part or in whole, is not permitted unless authorised by Volkswagen AG. Volkswagen AG does not guarantee or accept any liability with respect to the correctness of information in this document. Copyright by Volkswagen AG.
satelettronica

1.5 - Servicing injection pump

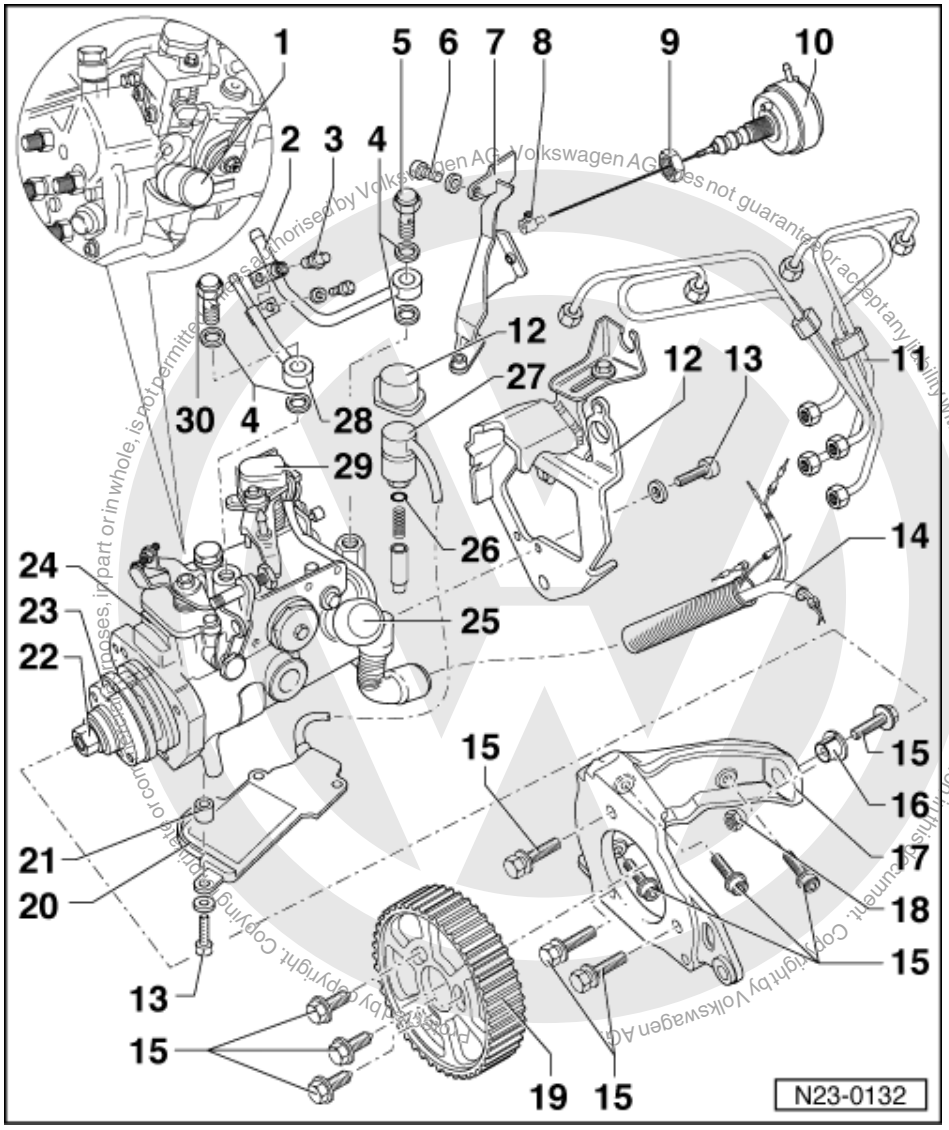

- Observe rules for cleanliness
  =>Page 12

1 Commencement of injection valve (N108)
- Checking =>Page 7 , final control diagnosis
- Currently not available as replacement part. Renew injection pump if defective

2 Supply pipe
- From fuel filter

3 Bleeder screw

4 Oil seal
- Renew

5 Banjo bolt, 25 Nm

satelettronica

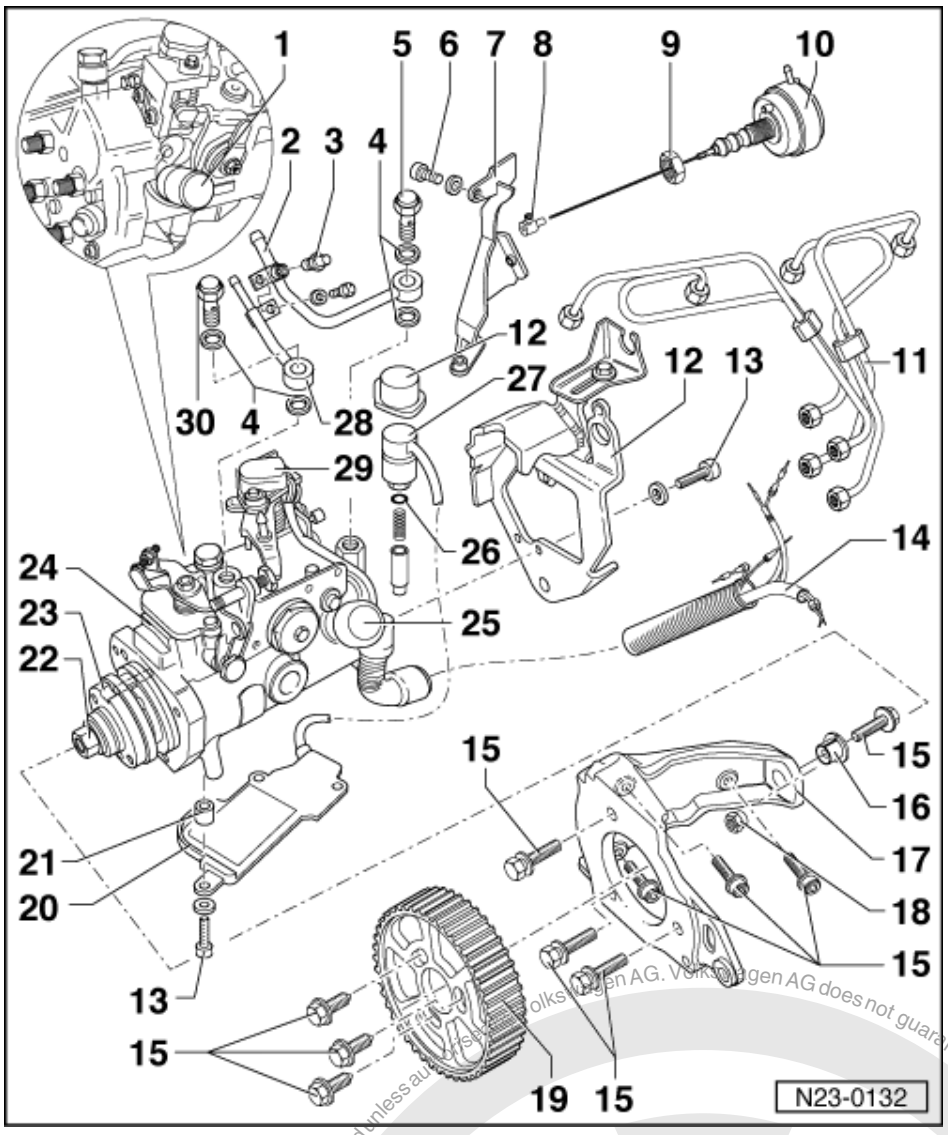

6 Shear bolt
7 Retainer
8 Clamp
9 6 Nm
10 Idling speed boost actuator
- Checking =>Page 36
- Adjusting => Page 36

11 Injector pipes
- Tighten to 25 Nm
- Remove with 3035
- Always remove pipework complete
- Do not alter shape

12 Cover
13 10 Nm

Protected by copyright. Copying for private or commercial purposes, in part or in whole, is not permitted unless authorised by Volkswagen AG. Volkswagen AG does not guarantee or accept any liability with respect to the correctness of information in this document. Copyright by Volkswagen AG.
satelettronica

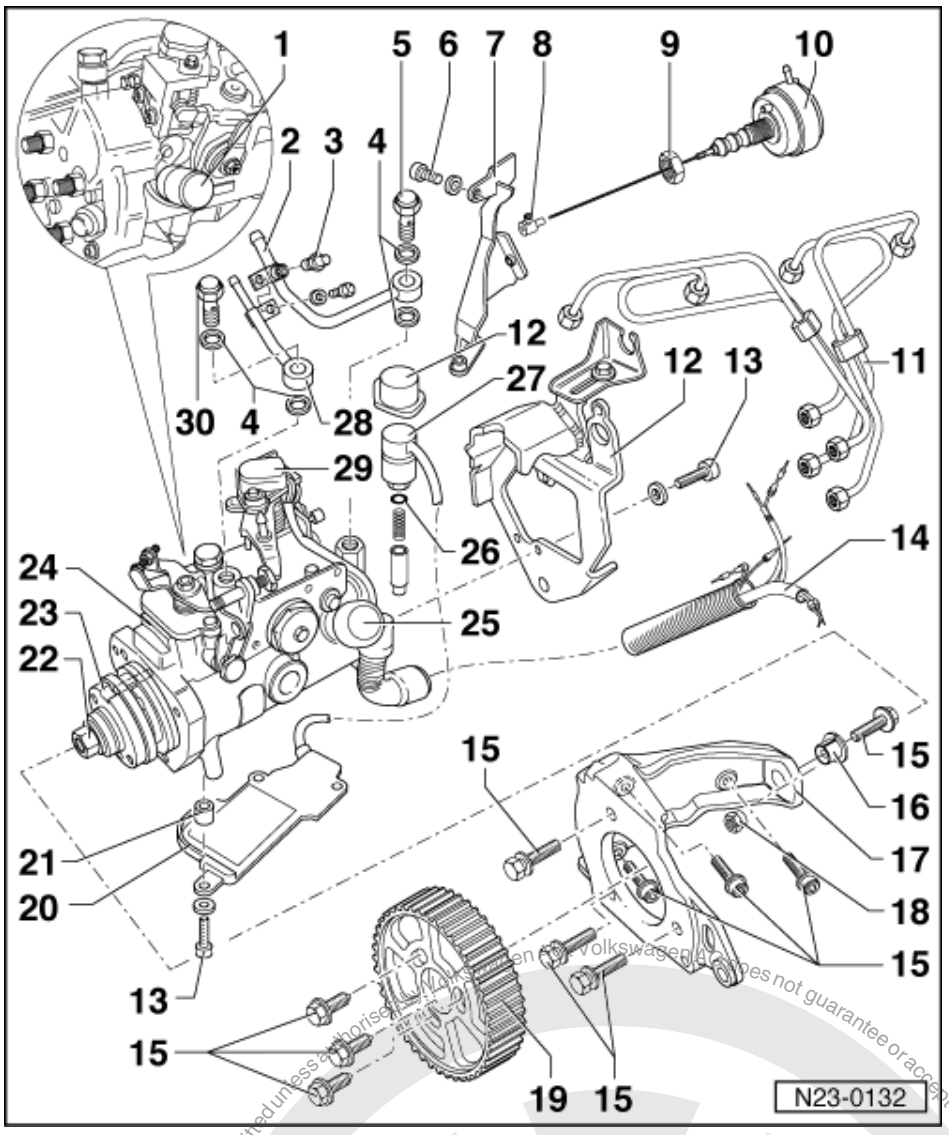

14 Electrical wiring
- Removing from multi-pin connector => Page 27
- Multi-pin connector assignment:

=> Current flow diagrams, Electrical fault finding and Fitting locations

15 25 Nm
16 Sleeve
- Tapered

17 Console
18 25 Nm
- Nut with taper

19 Injection pump sprocket
- Two part

Protected by copyright. Copying for private or commercial purposes, in part or in whole, is not permitted unless authorised by Volkswagen AG. Volkswagen AG does not guarantee or accept any liability with respect to the correctness of information in this document. Copyright by Volkswagen AG.
satelettronica

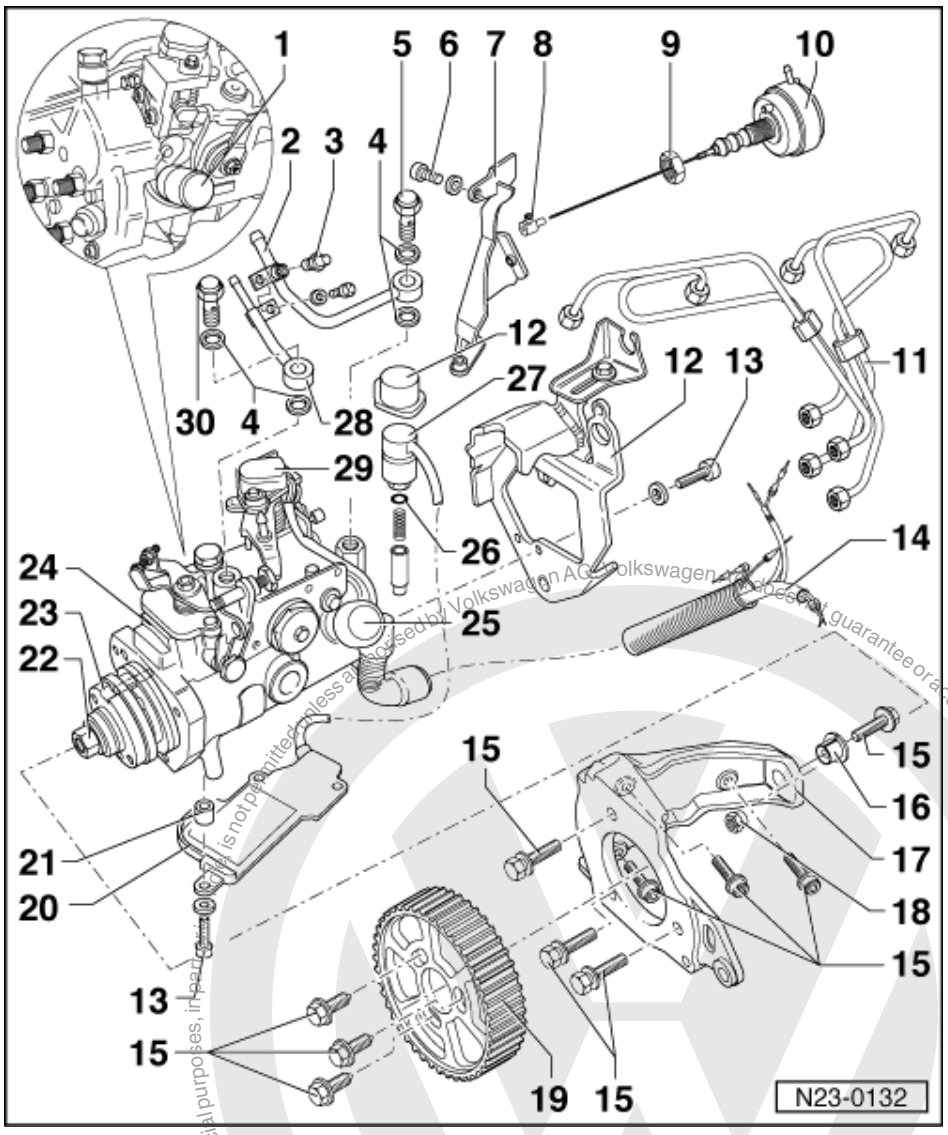

20 Fuel cut-off valve control unit (J366)

- Checked by immobilizer control unit:

=> Electrical system; Repair group 96; Servicing immobilizer; Carry out immobilizer self-diagnosis Servicing immobilizer Carry out immobilizer self-diagnosis

- Currently not available as replacement part. Renew injection pump if defective

21 Spacer bush

22 Nut

- For hub, item 23
- Do not loosen. Otherwise the injection pump basic setting may be altered and this cannot be reset with normal workshop equipment

23 Hub

Protected by copyright. Copyright by Volkswagen AG.
Copyright by Volkswagen AG. Volkswagen AG does not guarantee or accept any liability with respect to the correctness of information in this document.
This document is not permitted unless authorised by Volkswagen AG for commercial purposes, in part or in full.
satelettronica

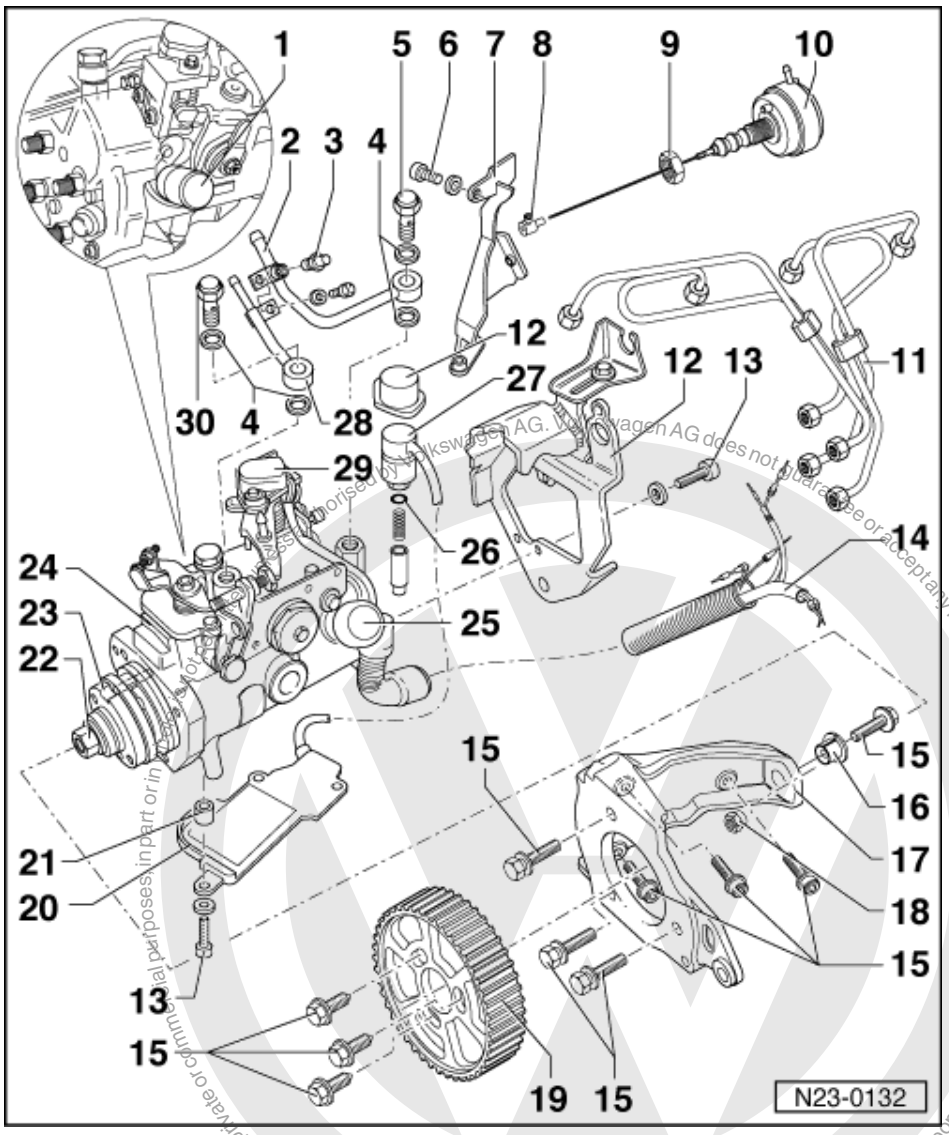

24 Injection pump

- Checking commencement of injection and adjusting =>Page 30
- Removing and installing
  =>Page 23
- On replacement, the injection pump must be matched to the electronic immobilizer

=> Electrical system; Repair group 96; Servicing immobilizer Servicing immobilizer

25 Full throttle stop valve (N194)

- Checking =>Page 7 , final control diagnosis
- Currently not available as replacement part. Renew injection pump if defective

26 O ring

satelettronica

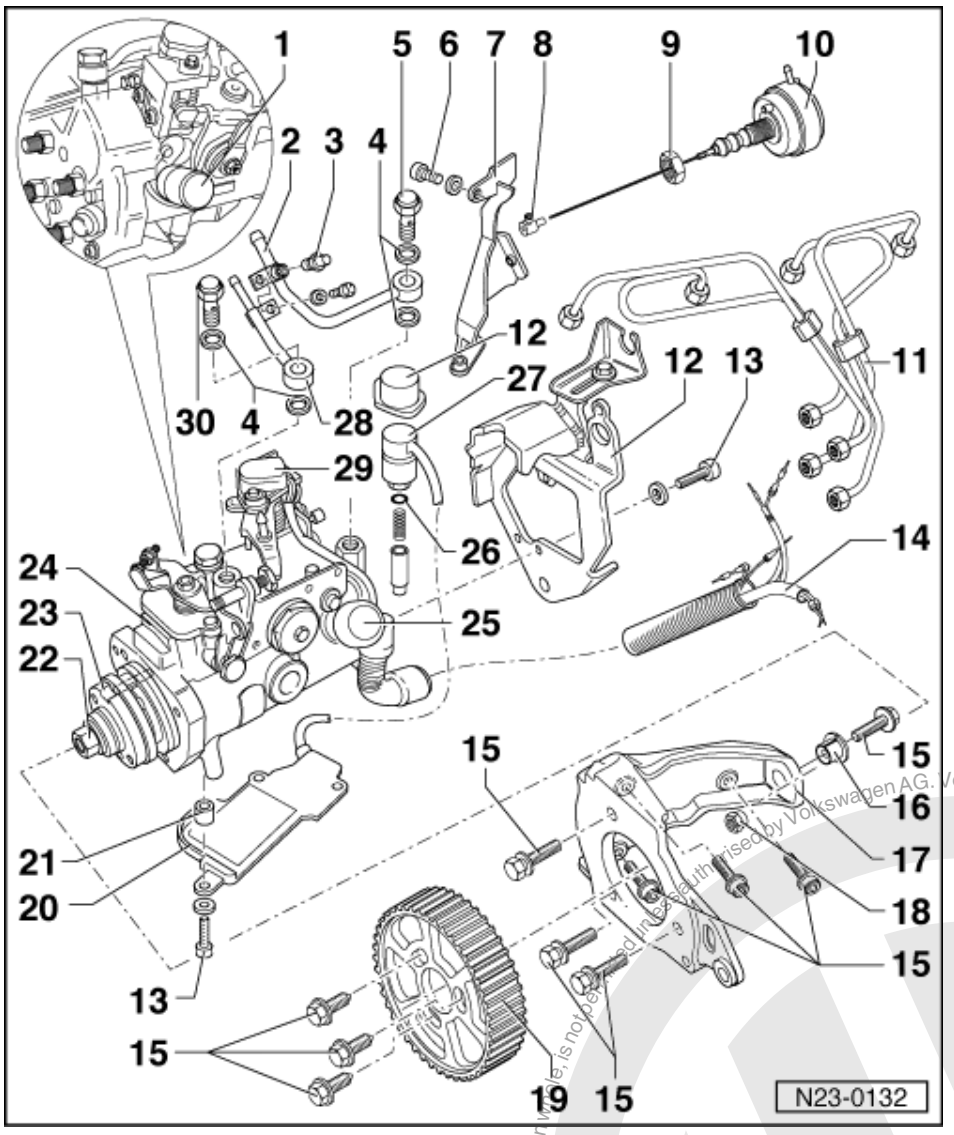

27 Fuel cut-off valve (N109)

- Is activated by the fuel cut-off valve control unit (J366)
- Currently not available as replacement part. Renew injection pump if defective

28 Return pipe

- To control valve/fuel filter

29 Load signal potentiometer (G157)

- Checking =>Page 40
- Currently not available as replacement part. Renew injection pump if defective

30 Banjo bolt, 25 Nm

- Is matched to injection pump

Protected by copyright. Copying for private or commercial purposes, in part or in whole, is not permitted unless authorised by Volkswagen AG. Volkswagen AG does not guarantee or accept any liability with respect to the correctness of information in this document. Copyright by Volkswagen AG.
satelettronica

1.6 - Servicing fuel filter

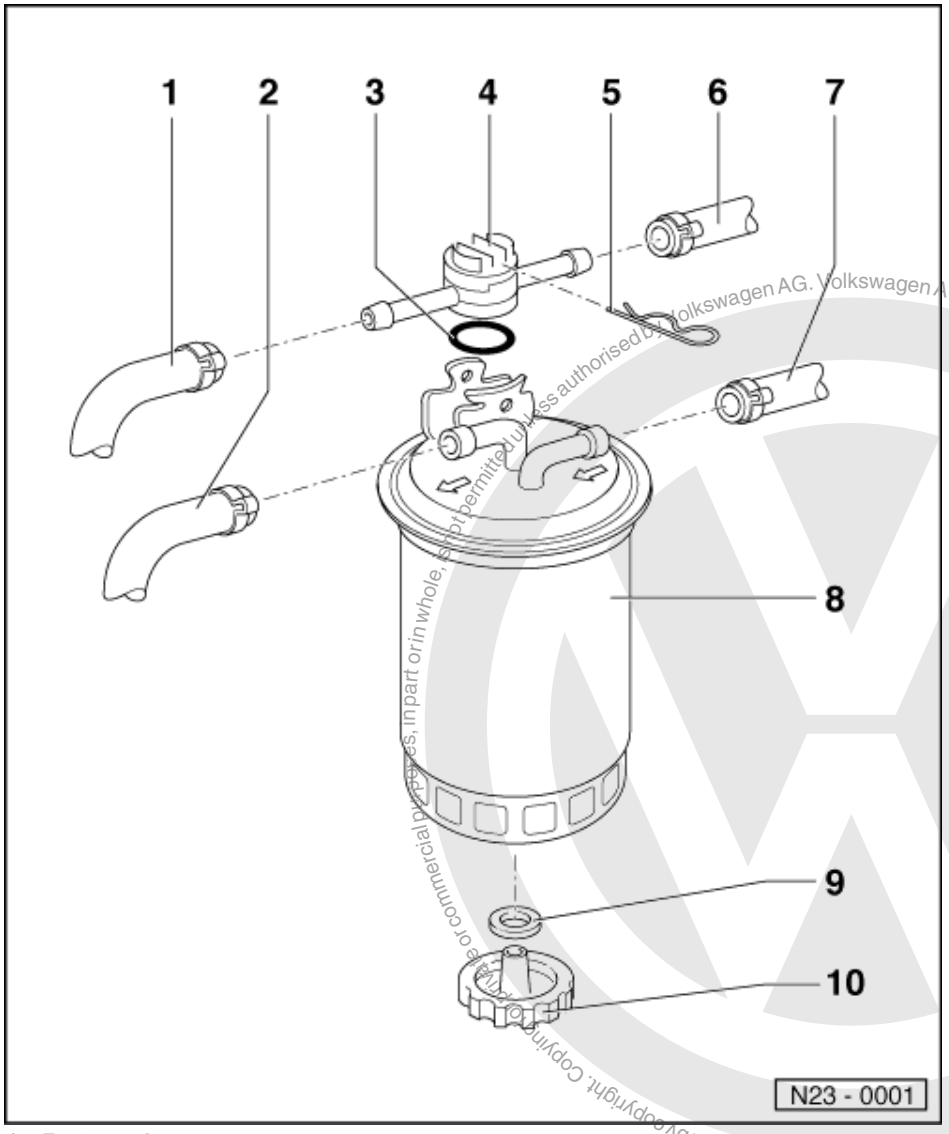

Protected by copyright. Copying for private or commercial purposes, in part or in whole, is not permitted unless authorised by Volkswagen AG. Volkswagen AG does not guarantee or accept any liability with respect to the correctness of information in this document. Copyright by Volkswagen AG.
satelettronica

1 Return pipe
- From injection pump

2 Supply pipe
- To injection pump

3 O-Ring
- Renew

4 Control valve
- Installation position: arrow points towards fuel tank
- When changing filter, remove securing clip and take control valve off complete with fuel pipes
- Below + 15 °C:
  Passageway to filter open
- Over + 31 °C:
  Passageway to filter closed

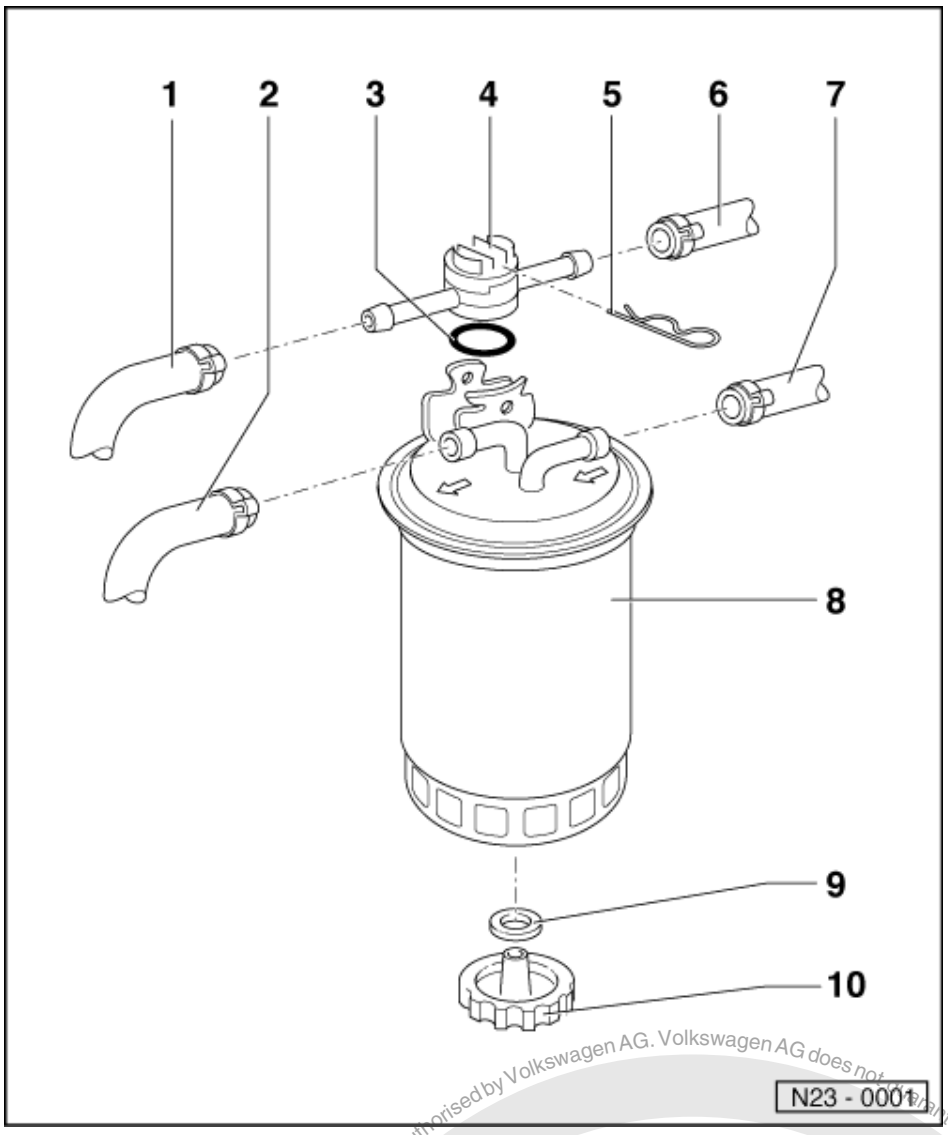

5 Securing clip
6 Return pipe
- To fuel tank

7 Supply pipe
- From fuel tank

8 Fuel filter
- Fill with diesel before installing
- Flow direction is marked by an arrow
- Do not interchange connections
- Renew if damaged

9 Gasket
- Renew if damaged

10 Water drain plug
- To bleed remove securing clip and take control valve off complete with fuel pipes attached
- Loosen and allow approx. 100 cm3 fluid to drain

Protected by copyright. Copying for private or commercial purposes, in part or in whole, is not permitted unless authorised by Volkswagen AG. Volkswagen AG does not guarantee or accept any liability with respect to the correctness of information in this document. Copyright by Volkswagen AG.
satelettronica

1.7 - Removing and installing injection pump

Special tools, testers and auxiliary items

- Support bracket 10-222 A in conjunction with legs 10-222 A/1
- Setting bar 2065 A
- Ring spanner 3035
- Pin 3359
- Pin wrench 3387
- Torque wrench V.A.G 1331 (5...50 Nm)
- Spade terminal release tool

With engine removed:

- Adjusting device 2068 A

Removing

- Remove intake hose between air cleaner and intake manifold.
- Remove upper toothed belt guard and cylinder head cover.

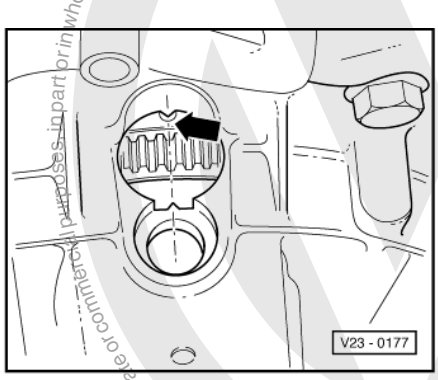

- -> Turn crankshaft to TDC No. 1 cylinder -arrow-.

Engine removed:

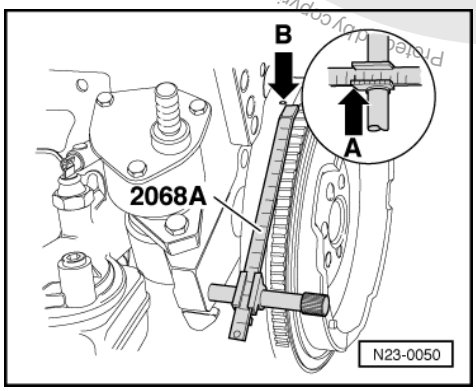

- -> Install adjustment device 2068 A as shown.
- Set setting device to 82.5 mm -arrow A-. The left notch of the vernier is the reference point.
- Turn crankshaft until flywheel TDC marking aligns with point of setting device -arrow B-.

Volkswagen AG does not guarantee or accept any liability with respect to the correctness of information in this document. Copyright by Volkswagen AG.
Printed by copyright. Copyright. Copying for private or commercial purposes, in part or in whole, is not permitted unless authorised by Volkswagen AG.
satelettronica

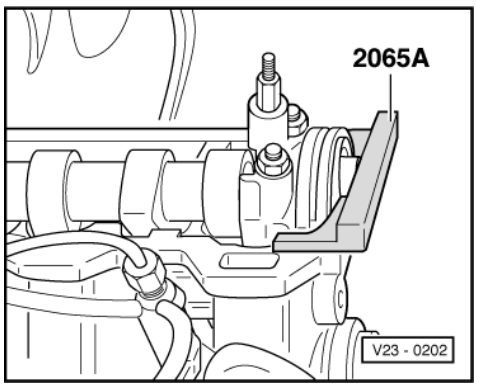

- -> Lock camshaft with setting bar.
- Centralize setting bar as follows:
  Turn arrested camshaft so that one end of setting bar contacts the cylinder head. Using feeler gauge establish the gap at the other end of the setting bar. Place a feeler gauge corresponding to half the gap between setting bar and cylinder head. Turn camshaft until the setting bar contacts the feeler gauge. Place a 2nd feeler gauge, of same thickness, at the other end between setting bar and cylinder head.

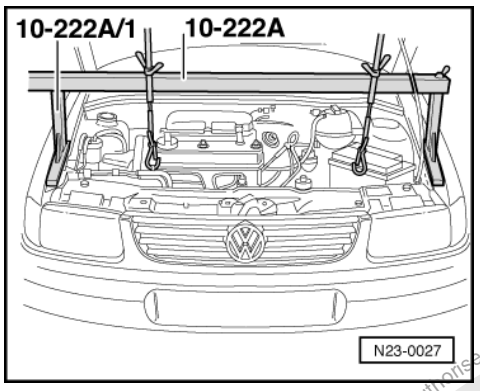

- -> Fit engine support bracket 10-222 A with legs 10-222 A/1.
- Locate support bracket in lifting eye on left of cylinder head and take-up weight of engine.

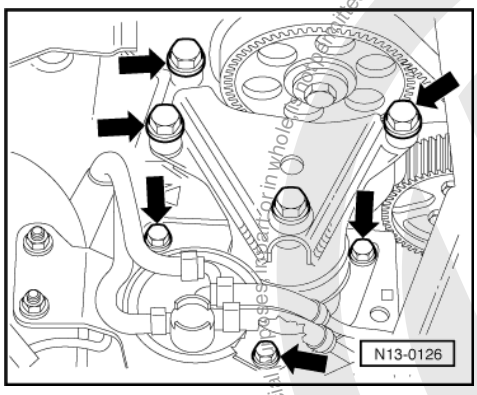

- -> Remove engine mounting.
- Remove lock carrier with attachments:

=> General body repairs; Repair group 50; Body, front; Removing and installing lock carrier with attachments. Body, front Removing and installing lock carrier with attachments.

Note:

Coolant hoses remain connected.

satelettronica
Protected by copyright. Copying for private or commercial purposes, in part or in whole, is not permitted unless authorised by Volkswagen AG. Volkswagen AG does not guarantee or accept any liability with respect to the correctness of information in this document. Copyright by Volkswagen AG.

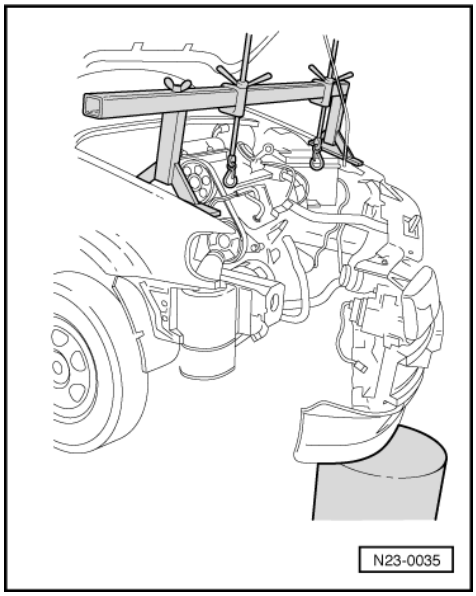

- -> Place the lock carrier on left longitudinal member and prevent it from falling off with a suitable object e.g. bucket.
- Pull the vacuum hose off idling speed boost actuator on the injection pump.
- Pull fuel supply and return hoses off injection pump.
- Unbolt all fuel lines at fuel pump.

Note:

Use slotted ring spanner 3035 to remove high pressure fuel pipes.

- Cover openings with a clean cloth.

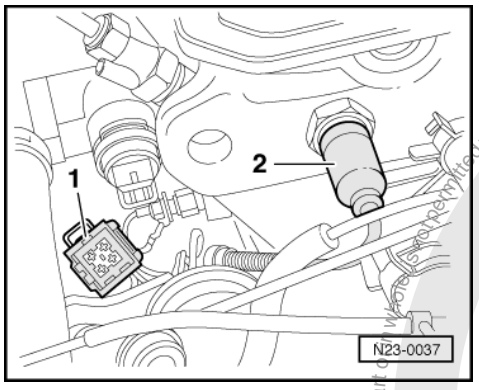

- Pull accelerator cable off control lever and support bracket.
- -> Pull connector -1- off engine temperature sender and connector -2- off oil pressure switch.
- Pull connector off oil pressure switch and oil temperature sender on oil filter bracket.
- Remove wiring for glow plugs.
- Pull connector off speedometer sender.

satelettronica
Protected by copyright. Copying for private or commercial purposes, in part or in whole, is not permitted unless authorised by Volkswagen AG. Volkswagen AG does not guarantee or accept any liability with respect to the correctness of information in this document. Copyright by Volkswagen AG.

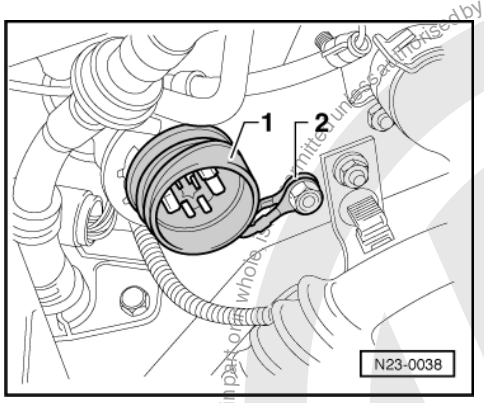

- -> Disconnect multi-pin connector and unclip connector from retainer.
- Remove earth cable -2-.

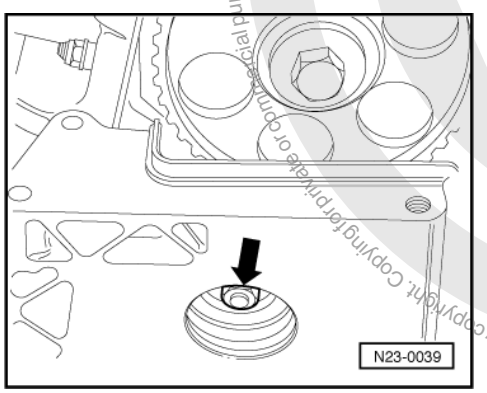

- -> Loosen tensioning roller nut -arrow-.

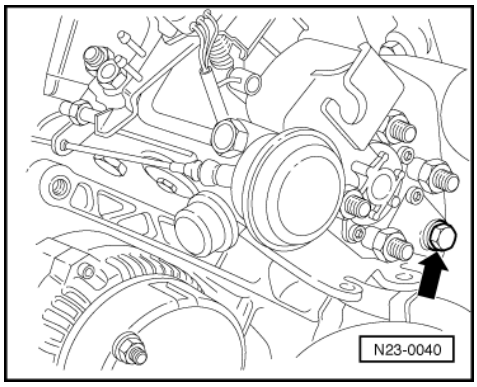

- -> Then remove bolt from rear support -arrow-.

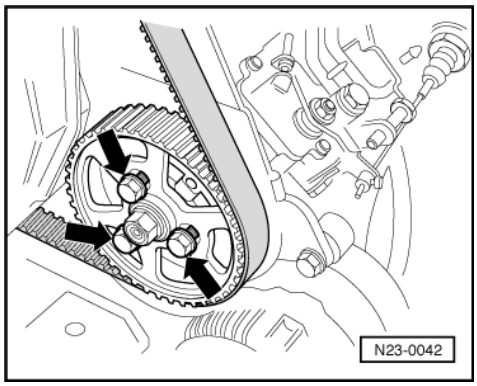

- -> Remove injection pump sprocket securing bolts -arrows-.

Protected by copyright. Copying for private or commercial purposes, in part or in whole, is not permitted unless authorised by Volkswagen AG. Volkswagen AG does not guarantee or accept any liability with respect to the correctness of information in this document. Copyright by Volkswagen AG.
satelettronica

- Remove toothed belt from camshaft and injection pump sprockets.

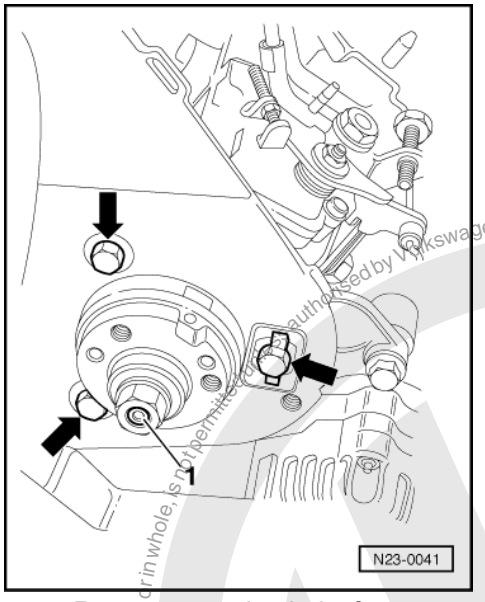

- -> Remove securing bolts from console -arrows-.

Note:

On no account must the nut -1- for the hub be loosened. Otherwise the injection pump basic setting will be altered and this cannot be reset with normal workshop equipment.

- Take off injection pump.

Note:

The return pipe banjo bolt is matched to the injection pump.

Installing

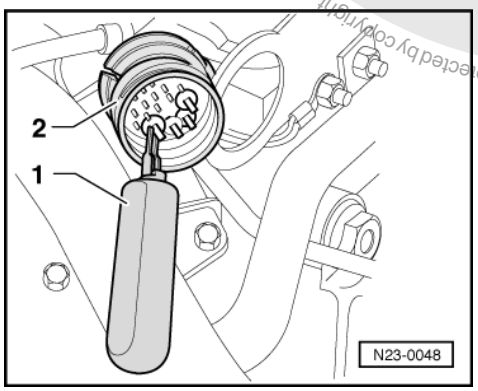

-> If the injection pump is replaced, the spade contacts must be pushed out of the multi-pin connector with the spade terminal release tool.

1 - Spade terminal release tool
2 - Multi-pin connector

Injections pumps supplied as a replacement part, are not fitted with a multi-pin connector. The spade connectors on the wires must be located in the multi-pin connector in accordance with the current flow diagram:

=> Current flow diagrams, Electrical fault finding and Fitting locations binder

Protected by copyright. Copying for private or commercial purposes, in part or in whole, is not permitted unless authorised by Volkswagen AG. Volkswagen AG does not guarantee or accept any liability with respect to the correctness of information in this document. Copyright by Volkswagen AG.

satelettronica

- Insert injection pump into console and then tighten securing bolt on rear support with conical nut first.
- Insert front securing bolts and tighten to 25 Nm.
- Fit bolts for securing injection pump sprocket to hub but do not tighten.
- Align injection pump sprocket to central position in elongated holes.

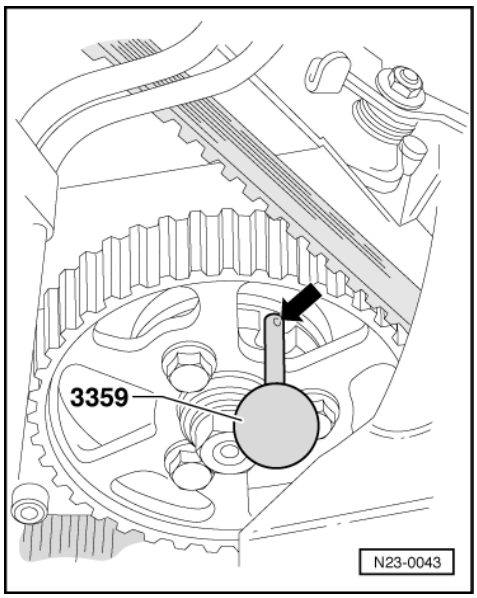

- -> Lock injection pump sprocket with pin 3359. The pin bore must have a gap of (approx. 3 mm) to the hub.

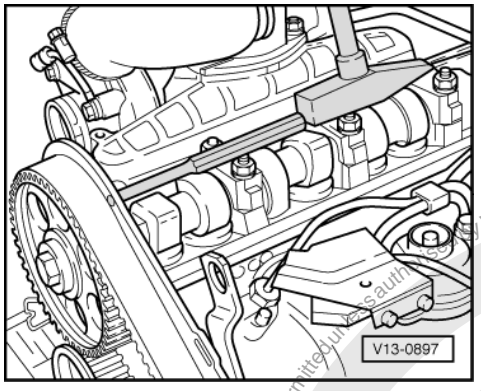

- Loosen camshaft sprocket securing bolt a half turn.
- Place a drift through hole in the rear of the toothed belt guard and release the camshaft sprocket from camshaft taper with a blow from a hammer.
- Check whether TDC mark on flywheel and reference mark are aligned.
- Fit toothed belt.

Protected by copyright. Copying for private or commercial purposes, in part or in whole, is not permitted unless authorised by Volkswagen AG. Volkswagen AG does not guarantee or accept any liability with respect to the correctness of information in this document. Copyright by Volkswagen AG.
satelettronica

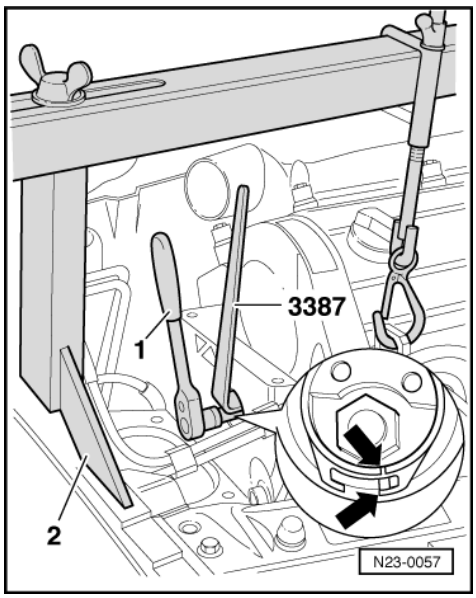

- -> Tension toothed belt. Using pin wrench 3387 on eccentric turn clockwise until the notch and the raised point align -arrows-.

  1 - Commercial ratchet, 3/8" drive
  2 - Support bracket 10-222 A in conjunction with legs 10-222 A/1

- Tighten securing nut to 20 Nm.
- Check TDC mark on flywheel again.
- Tighten injection pump sprocket securing bolts to 25 Nm.
- Tighten camshaft sprocket securing bolt to 45 Nm.
- Remove locking pin 3359.
- Remove setting bar 2065A from camshaft.
- Turn crankshaft two rotations in engine D.O.R. until crankshaft is set to TDC No. 1 cylinder again.
- Check whether injection pump sprocket can be locked with pin 3359.

If the injection pump sprocket cannot be locked:

- Loosen injection pump sprocket securing bolts.
- Turn injection pump sprocket hub until the pin fits.
- Tighten injection pump sprocket securing bolts to 25 Nm.

- Fill injection pump with clean Diesel through return and supply pipe connections.
- Reconnect injection pipes, fuel pipes and electrical wiring.

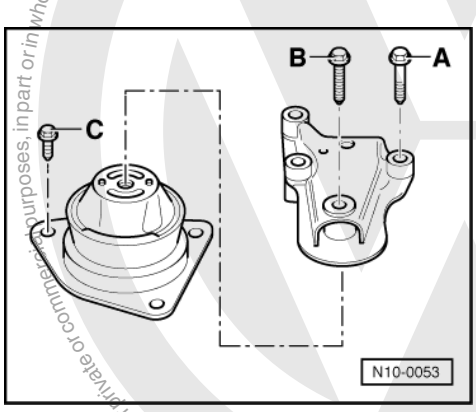

- -> Install engine mounting.

A = 50 Nm

satelettronica
Protected by copyright. Copying for private or commercial purposes, in part or in whole, is not permitted unless authorised by Volkswagen AG. Volkswagen AG does not guarantee or accept any liability with respect to the correctness of information in this document. Copyright by Volkswagen AG.

B = 50 Nm
C = 25 Nm

- Install toothed belt guard, cylinder head cover and intake hose.
- Install lock carrier with attachments:

=> General body repairs; Repair group 50; Body, front; Removing and installing lock carrier with attachments. Body, front Removing and installing lock carrier with attachments.

- Match new injection pump to electronic immobilizer.

=> Repair group 96; Servicing electronic immobilizer Servicing electronic immobilizer

- Check idling speed and governed speed => Page 35 .

1.8 - Checking and adjusting injection pump timing

Special tools, testers and auxiliary items

- Setting bar 2065 A
- Pin 3359
- Torque wrench V.A.G 1331 (5...50 Nm)

With engine removed:

- Adjusting device 2068 A

Test sequence

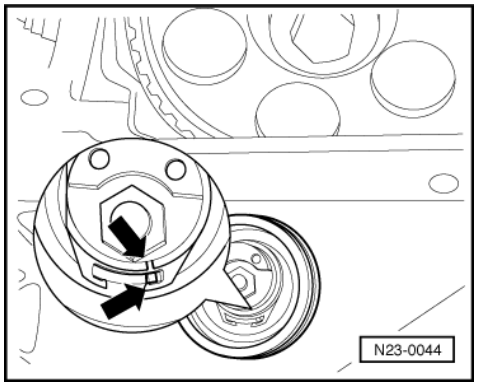

- Remove intake hose between air cleaner and intake manifold.
- Remove upper toothed belt guard.
- -> Check toothed belt tension. The notch and raised portion -arrows- must align.

If markings do not align:

- Adjust toothed belt tension:

=> Repair group 13; Dismantling and assembling engine; Removing and installing toothed belt and adjusting tension. Dismantling and assembling engine Removing and installing toothed belt and adjusting tension.

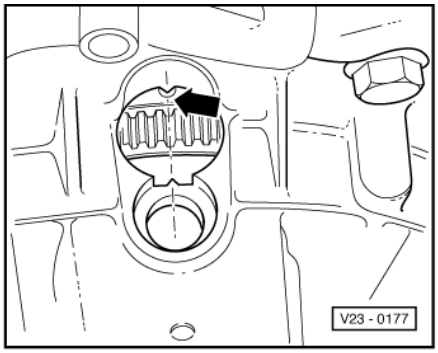

Protected by copyright. Copying for private or commercial purposes, in part or in whole, is not permitted unless authorised by Volkswagen AG. Volkswagen AG does not guarantee or accept any liability with respect to the correctness of information in this document. Copyright by Volkswagen AG.
satelettronica

- -> Turn crankshaft to TDC No. 1 cylinder -arrow-.

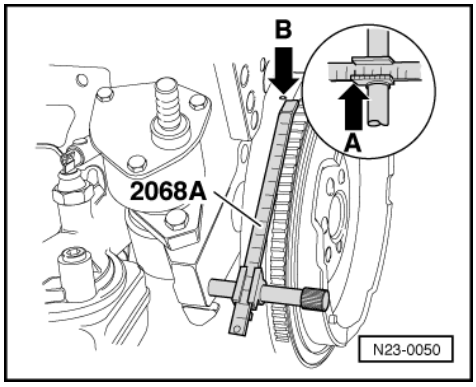

Engine removed:

- -> Install adjustment device 2068 A as shown.
- Set setting device to 82.5 mm -arrow A-. The left notch of the vernier is the reference point.
- Turn crankshaft until flywheel TDC marking aligns with point of setting device -arrow B-.

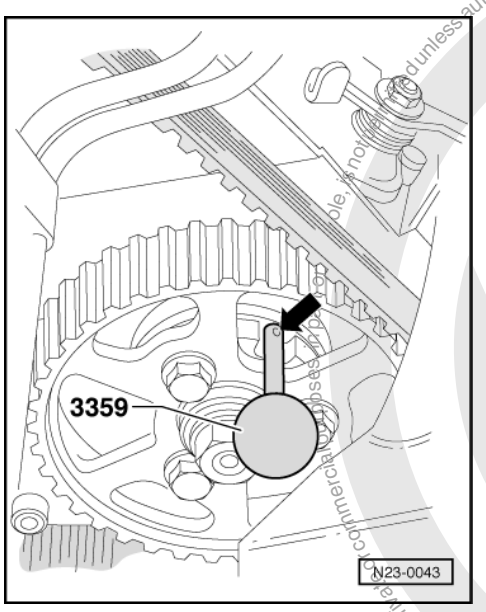

- -> Check whether the injection pump sprocket can be locked with the pin 3359. The pin bore must have a gap of approx. 3 mm to the hub.

If the pin cannot be pushed into the holes, the commencement of injection must be reset as follows:

- Remove cylinder head cover.

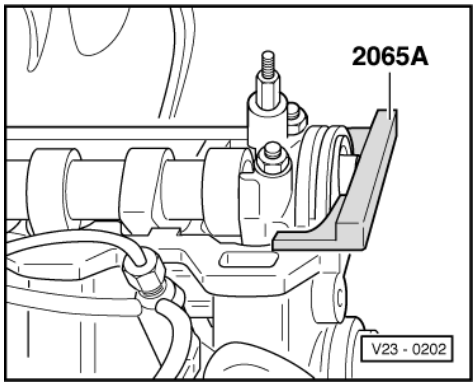

Protected by copyright. Copyright by Volkswagen AG. Volkswagen AG does not guarantee or accept any liability with respect to the correctness of information in this document. Copyright by Volkswagen AG. Protected by copyright. Copying for private or commercial purposes, in part or in whole, is not permitted unless authorised by Volkswagen AG.
satelettronica

- -> Lock camshaft with setting bar.
- Centralize setting bar as follows:
  Turn arrested camshaft so that one end of setting bar contacts the cylinder head. Using feeler gauge establish the gap at the other end of the setting bar. Place a feeler gauge corresponding to half the gap between setting bar and cylinder head. Turn camshaft until the setting bar contacts the feeler gauge. Place a 2nd feeler gauge, of same thickness, at the other end between setting bar and cylinder head.

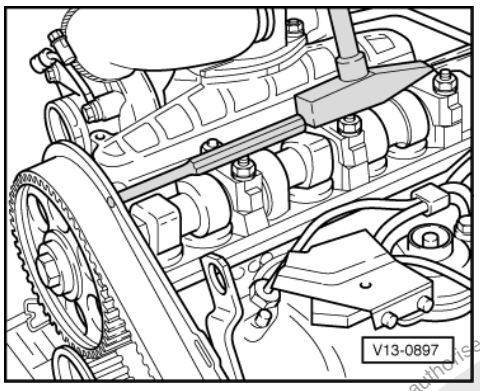

- Loosen camshaft sprocket securing bolt a half turn.
- Place a drift through hole in the rear of the toothed belt guard and release the camshaft sprocket from camshaft taper with a blow from a hammer.

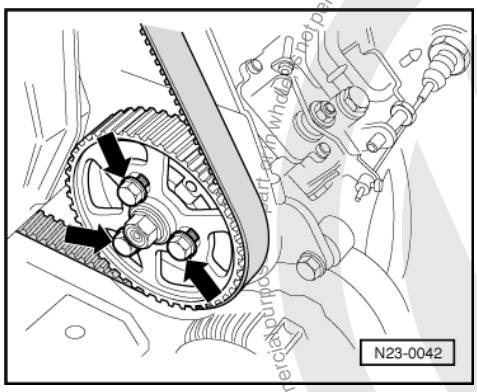

- -> Loosen injection pump sprocket securing bolts -arrows-.
- Turn injection pump sprocket hub until the pin fits.
- Check TDC mark on flywheel again.
- Tighten camshaft sprocket securing bolt to
  45 Nm.
- Tighten injection pump sprocket securing bolts to
  25 Nm.
- Remove locking pin 3359.
- Remove setting bar 2065A from camshaft.
- Turn crankshaft two rotations in engine D.O.R. until crankshaft is set to TDC No. 1 cylinder again.

Protected by copyright. Copyright by Volkswagen AG.
Copyright by Volkswagen AG. Volkswagen AG does not guarantee or accept any liability with respect to the correctness of information in this document. Copyright by Volkswagen AG. Not permitted to be authorised by Volkswagen AG.
satelettronica

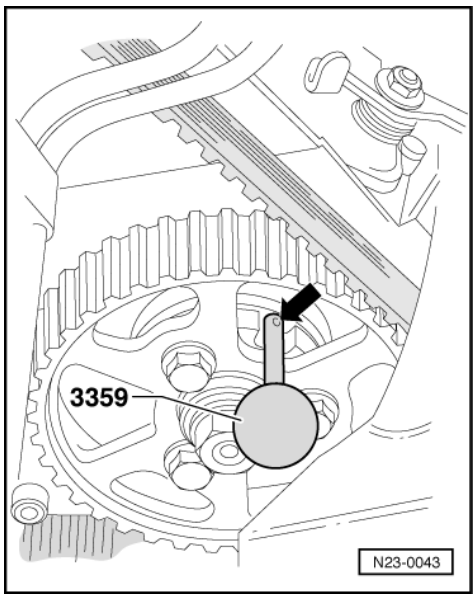

- -> Check whether injection pump sprocket can be locked with pin 3359.

If the injection pump sprocket cannot be locked:

- Loosen injection pump sprocket securing bolts.
- Turn injection pump sprocket hub until the pin fits.
- Tighten injection pump sprocket securing bolts to 25 Nm.

- Install toothed belt guard, cylinder head cover and intake hose.

1.9 - Checking valve timing

Special tools, testers and auxiliary items

- Setting bar 2065 A
- Pin 3359
- Torque wrench V.A.G 1331 (5...50 Nm)

With engine removed:

- Adjusting device 2068 A

Test sequence

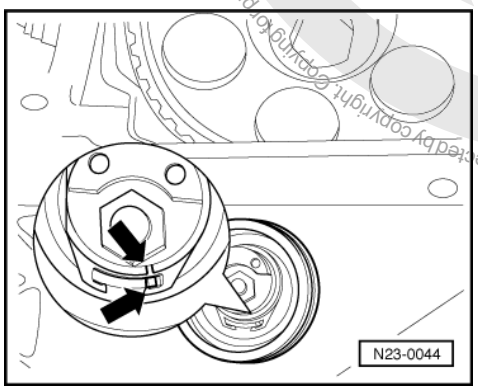

- Remove intake hose between air cleaner and intake manifold.
- Remove upper toothed belt guard and cylinder head cover.

Protected by copyright. Copying for private or commercial purposes, in part or in whole, is not permitted unless authorised by Volkswagen AG. Volkswagen AG does not guarantee or accept any liability with respect to the correctness of information in this document. Copyright by Volkswagen AG.
satelettronica

- -> Check the toothed belt tension. Notch and raised portion -arrows- must align.

If markings do not align:

- Adjust toothed belt tension:

=> Repair group 13; Dismantling and assembling engine; Removing and installing tooted belt, tension Dismantling and assembling engine Removing and installing tooted belt, tension

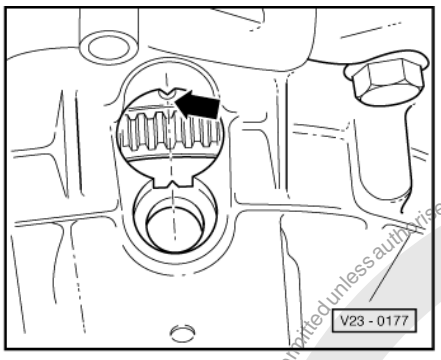

- -> Turn crankshaft to TDC No. 1 cylinder -arrow-.

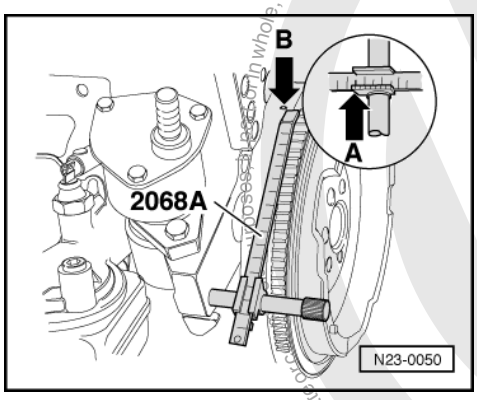

Engine removed:

- -> Install adjustment device 2068 A as shown.
- Set setting device to 82.5 mm -arrow A-. The left notch of the vernier is the reference point.
- Turn crankshaft until flywheel TDC marking aligns with point of setting device -arrow B-.

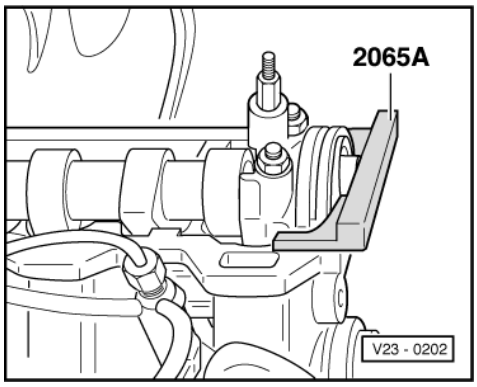

- -> Setting bar must fit into camshaft slot. If it is not possible to insert the setting bar, adjust injection pump commencement of injection =>Page 30 .

Protected by copyright. Copying for private or commercial purposes, in whole or in part, is not permitted unless authorised by Volkswagen AG. Volkswagen AG does not guarantee or accept any liability with respect to the correctness of information in this document. Copyright by Volkswagen AG.
satelettronica

1.10 - Checking and adjusting idling speed, idling speed boost and governed speed

Special tools, testers and auxiliary items

- Ignition tester V.A.G 1767 or V.A.G 1367

Checking and adjustment conditions

- Oil temperature at least 60 °C.
- Electric consumers switched off.

Work sequence

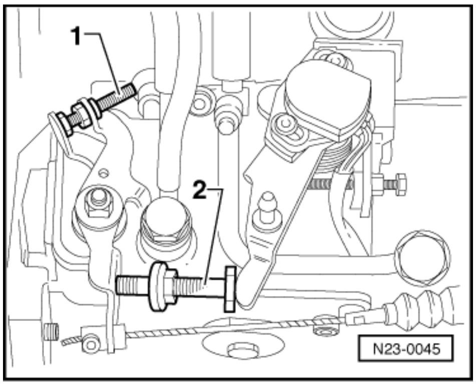

- Connect ignition tester V.A.G 1367 or ignition tester V.A.G 1767.
- Start the engine and run at idling speed.

Idling speed

- -> Adjustment is by turning the idling speed adjustment screw -1-
  Specification: 940± 20 rpm

Note:

On no account must the screw -2- be turned.

Idling speed boost

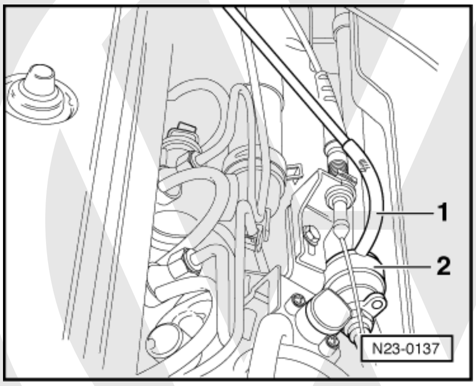

When engine is cold or when switching on loads the idling speed will be increased by the idling speed boost actuator.

Note:

The idling speed boost is not adjustable.

Protected by copyright. Copying for private or commercial purposes, in part or in whole, is not permitted unless authorised by Volkswagen AG. Volkswagen AG does not guarantee or accept any liability with respect to the correctness of information in this document. Copyright by Volkswagen AG.

satelettronica

- -> Pull vacuum hose -1- off actuator -2-.
  Specification: 1050 ±50 rpm

If the specification is not attained:

- Check idling speed => Page 35 .

Engine governed speed (no load)

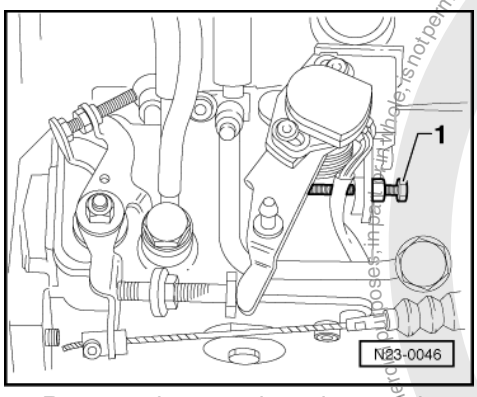

- Remove the securing wire and the protective cap.
- -> Rev-up to full throttle and adjust the engine speed with the adjustment screw -1-.
  Specification: 5050 ±100 rpm
- Lock adjusting screw.
- Replace the protective cap and secure the adjustment screw with wire.

1.11 - Idling speed boost actuator

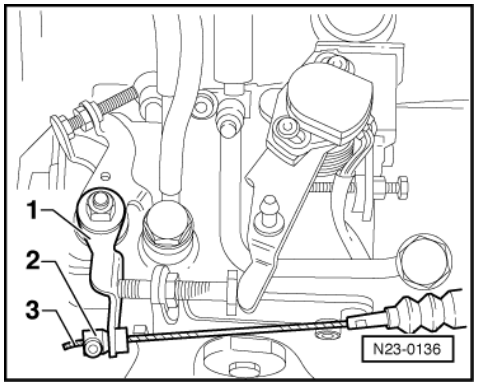

When the engine is cold or when switching on loads the idling speed will be increased by the idling speed boost actuator. If this actuator is replaced, it is to be connected as follows with the engine cold:

- -> Clamp the cable -3- with the clamping piece -2- , so that there is still slight play between clamping piece and idling speed boost lever -1-.

1.12 - Checking idling speed boost actuator

Special tools, testers and auxiliary items

- Hand vacuum pump V.A.G 1390

Protected by copyright. Copying for private or commercial purposes, in part or in whole, is not permitted unless authorised by Volkswagen AG. Volkswagen AG does not guarantee or accept any liability with respect to the correctness of information in this document. Copyright by Volkswagen AG.
satelettronica

Test sequence

- Pull vacuum hose off idling speed actuator.

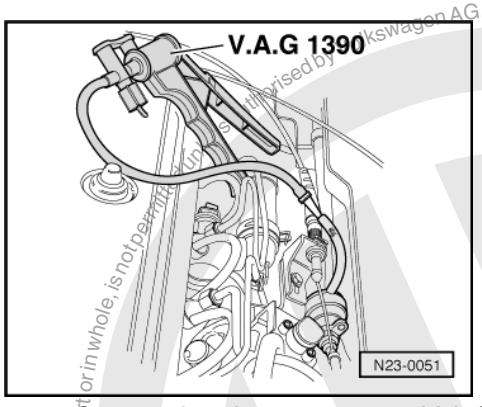

- -> Connect hand vacuum pump V.A.G 1390 to actuator.
- Operate pump. The actuator cable must pull the idling speed boost lever in direction of actuator.
- Pull the hand vacuum pump hose off the actuator. The idling speed boost lever must return to its original position.

1.13 - Removing and installing injectors

Special tools, testers and auxiliary items

- Ring spanner 3035
- Torque wrench V.A.G 1331 (5...50 Nm)
- Torque wrench V.A.G 1332 (40...200 Nm)

Note:

Defective injectors cause the following faults:

- Misfiring
- Knocking in one or more cylinders
- Engine over-heating
- Loss of power
- Excessive black exhaust smoke
- Higher fuel consumption
- Excessive blue smoke when starting from cold

Defective injectors can be located by loosening the high pressure pipe union on each injector in turn with the engine running at a fast idling speed. If engine speed remains constant after loosening a pipe union, this indicates a defective injector.

Removing

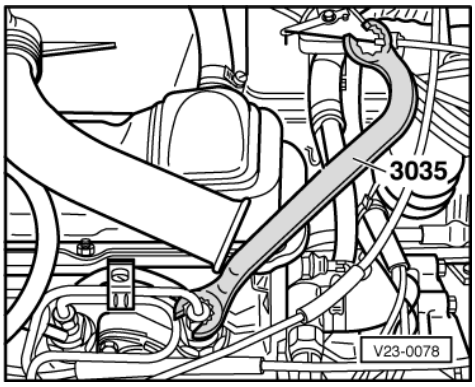

Protected by copyright. Copyright by Volkswagen AG. Volkswagen AG does not guarantee or accept any liability with respect to the correctness of information in this document. Copyright by Volkswagen AG.
satelettronica

- -> Remove injection pipes with a slotted ring spanner 3035.

Note:

Always remove pipe set complete. Do not alter pipe shape.

- Remove injectors with 27 mm socket.

Installing

Note:

Always renew heat shield between cylinder head and injectors.

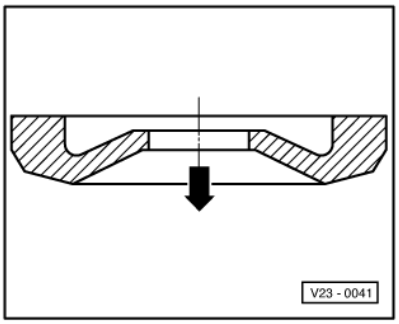

-> Installation position of heat shield:
Arrow points towards cylinder head.

Tightening torques:
Injection pipes = 25 Nm
Injectors = 70 Nm

Note:

Always renew heat shield between cylinder head and injectors.

1.14 - Servicing injectors

Special tools, testers and auxiliary items

- Torque wrench V.A.G 1332 (40...200 Nm)

Work sequence

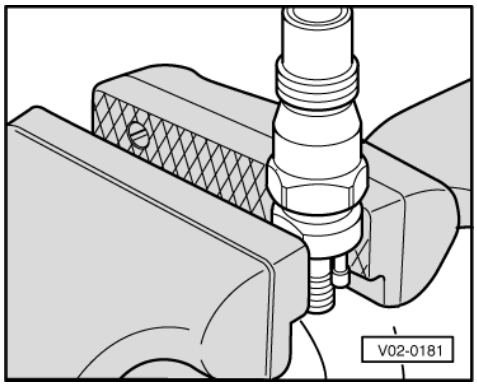

Protected by copyright. Copying for private or commercial purposes, in part or in whole, is not permitted unless authorised by Volkswagen AG. Volkswagen AG does not guarantee or accept any liability with respect to the correctness of information in this document. Copyright by Volkswagen AG.
satelettronica

- -> Tighten injector upper part in a vice and loosen threaded union.
- So that the individual parts do not fall out, tighten injector lower part in vice and dismantle injector.

When dismantling the injector ensure individual parts are not interchanged.

Tightening torque:
Injector upper and lower parts 70 Nm

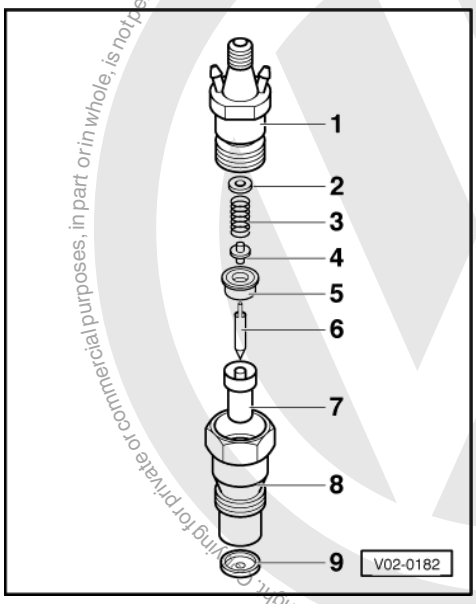

-> Injector components

1 - Injector upper part
2 - Shim
3 - Nozzle valve spring
4 - Pressure pin
5 - Nozzle valve retainer insert
6 - Nozzle valve (needle)
7 - Nozzle body
8 - Injector
9 - Heat shield

1.15 - Checking injector nozzle valve tip for damage, injection pressure and for leakage.

Special tools, testers and auxiliary items

- Injector tester V.A.G 1322

Checking injector nozzle valve tip for damage

(Visual check)

If injector nozzle valve tip is damaged e.g. broken off or deformed, renew injector or nozzle body and nozzle valve (needle).

Protected by copyright. Copying for private or commercial purposes, in part or in whole, is not permitted unless authorised by Volkswagen AG. Volkswagen AG does not guarantee or accept any liability with respect to the correctness of information in this document. Copyright by Volkswagen AG.
satelettronica

Checking injection pressure

Warning!
When testing injectors ensure that the jet of fuel does not contact the hands as the high pressure will cause the fuel to penetrate the skin and may cause severe injuries.

Test conditions

- Pressure gauge on

Test sequence

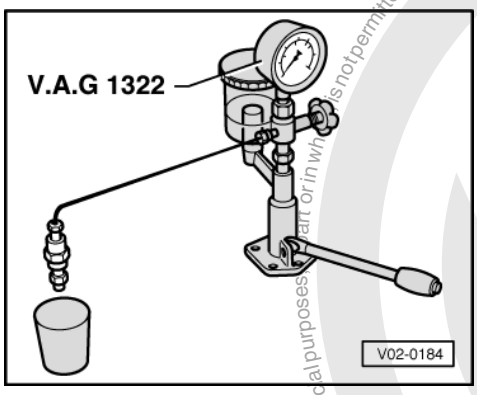

- -> Connect injector to injector test unit.
- Move pump lever down slowly. When spray begins, read off breaking pressure. Specification incorrect; adjust breaking pressure by exchanging shims.
  Specification:
  New injectors: 130 ... 138 bar
  Wear limit: 120 bar

Note:

When servicing used injectors adjust breaking pressures to specifications for new injectors.

- Thicker shims increase breaking pressure.
- Thinner shims decrease breaking pressure.
- Increasing spring compression by 0.5 mm increases breaking pressure by 5.0 bar

Adjustment shims are available from 1.00...1.95 mm thick and increase by 0.5 mm. Use box 3065 to store shims.

Checking for leaks

- Move pump lever down slowly and maintain a pressure of approx. 110 bar for 10 seconds. No fuel should leak from the nozzle tip.

1.16 - Checking load signal potentiometer

Special tools, testers and auxiliary items

- Fault reader V.A.G 1551 (or vehicle system tester V.A.G 1552) with cable V.A.G 1551/1
- Hand multimeter V.A.G 1526 or multimeter V.A.G 1715
- Adapter set V.A.G 1594
- Current flow diagram

Test sequence

- Connect the fault reader V.A.G 1551 (V.A.G 1552) and with ignition switched on select Diesel pump electronics control unit with the "Address word" 41.

Protected by Copyright. Copying for private or commercial purposes, in part or in whole, is not permitted unless authorised by Volkswagen AG. Volkswagen AG does not guarantee or accept any liability with respect to the correctness of information in this document. Copyright by Volkswagen AG.
satelettronica

(Connecting fault reader and selecting engine electronics control unit => Page 2 .)

-> Indicated on display:

```
Rapid data transfer      HELP
Select function XX
```

- Press keys 0 and 8 for the function "Read measured value block" and confirm entry with Q key.

-> Indicated on display:

```
Read measured value block      HELP
Input display group number XX
```

- Press keys 0 and 1 for "Display group number 01" and confirm entry with Q key.

-> Indicated on display:
(1...4 = Display zones)

```
Read measured value block      1
     1      2      3      4
```

- Read off voltage value in display zone 2.
  Specification: At least 0.2 V
- Slowly open throttle to full throttle position and observe the voltage indicated in display zone 2. The voltage must increase uniformly over the whole range.
  Specification: Max. 4.8 V
- Press the ⇒key.
- Press keys 0 and 6 for the "End data transfer" function and confirm input with the Q key.
- Switch off ignition.

If the voltage does not increase uniformly:

- Renew injection pump =>Page 23 .

If the voltage increases uniformly but is not within the specification limits:

- Check governed speed =>Page 35
- Check wire to load signal potentiometer between automatic glow period control unit (J179) and 19 pin connector for transfer resistances according to current flow diagram (control unit pulled out).
  Wire resistance: Max. 1.5 ω

If no wiring fault is detected and the governed speed is OK:

- Renew injection pump =>Page 23 .

If voltage remains constant:

- Switch off ignition.
- Separate multi-pin connector.

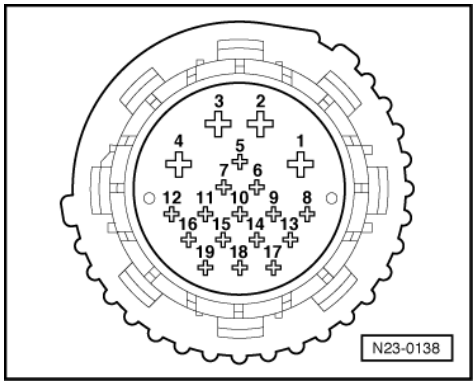

- -> Connect multimeter to measure voltage at connector contacts 12+15.
- Switch on ignition.
  Specification: min. 4.9 V
- Switch off ignition.

Volkswagen AG does not guarantee or accept any liability with respect to the correctness of information in this document. Copyright by Volkswagen AG. Protected by copyright. Copying or printing in whole or in part is only permitted with the express authorisation of Volkswagen AG. Copyright by Volkswagen AG. Protected by copyright. Copying or printing in whole or in part is only permitted unless authorised by Volkswagen AG.
satelettronica

- Check wire to load signal potentiometer between automatic glow period control unit (J179) and multi-pin connector for open circuit according to current flow diagram (control unit pulled out).
  Wire resistance: Max. 1.5 ω
- Additionally check wires for short to one another.
  Specification: ∞ω

If the voltage supply and wirings are OK:

- Renew injection pump =>Page 23 .

If no wiring fault is detected and a minimum voltage of 4.9 V was not present between contacts 12+15:

- Renew automatic glow period control unit (J179) =>Page 13 , item 4 .

1.17 - Checking commencement of injection valve

Special tools, testers and auxiliary items

- Hand multimeter V.A.G 1526
- Adapter set V.A.G 1594

Test sequence

- Separate multi-pin connector.

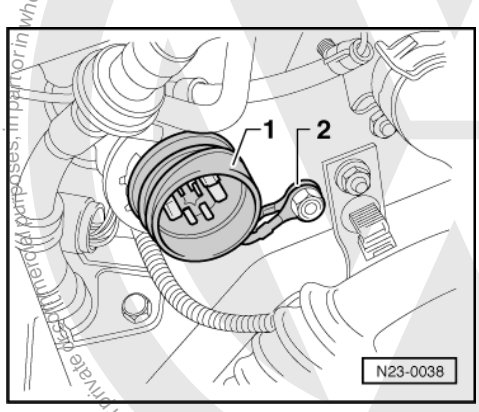

- -> Unclip connector -1- from retainer.

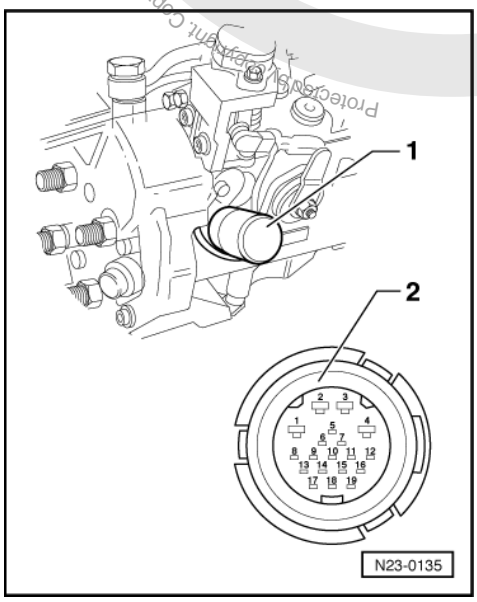

Volkswagen AG. Volkswagen AG does not guarantee or accept any liability with respect to the correctness of information in this document. Copyright by Volkswagen AG. Protected by copyright. Copying for private or commercial purposes, in part or in whole, is not permitted unless authorised by Volkswagen AG.
satelettronica

- -> Measure resistance of valve -1-at contact 18 of multi-pin connector -2- and vehicle earth.
  Specification: 14...17 ω(at approx. 20 °C)

=> Current flow diagrams, Electrical fault finding and Fitting locations binder

If the specification is not attained:

- Renew injection pump =>Page 23 .

1.18 - Checking full throttle stop valve

Special tools, testers and auxiliary items

- Hand multimeter V.A.G 1526 or multimeter V.A.G 1715
- Adapter set V.A.G 1594

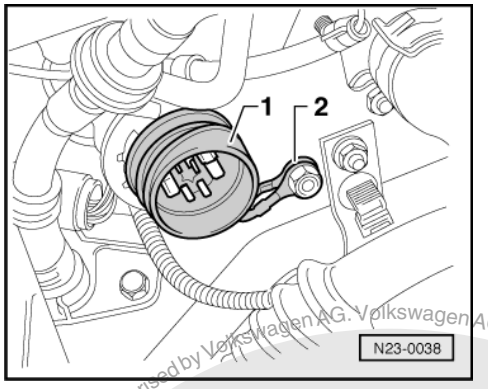

Test sequence

- Separate multi-pin connector.
- -> Unclip connector -1- from retainer.

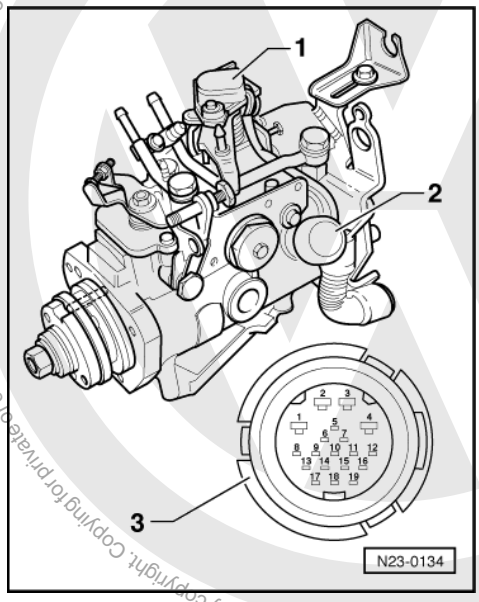

- -> Measure resistance of valve -2- at contact 7 of multi-pin connector -3- and vehicle earth.
  Specification 14...17ω(at approx. 20°C)

satelettronica

If the specification is not attained:

- Renew injection pump =>Page 23 .

1.19 - Checking idling speed boost valve

Special tools, testers and auxiliary items

- Hand multimeter V.A.G 1526 or multimeter V.A.G 1715
- Adapter set V.A.G 1594

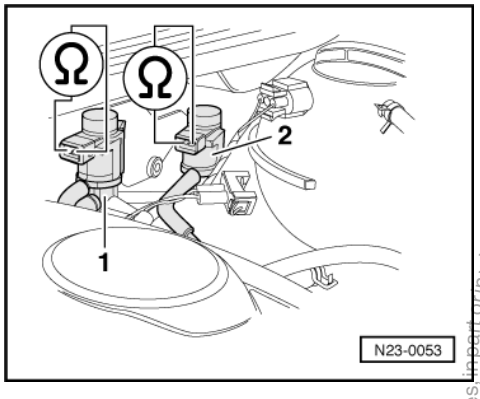

Test sequence

- -> Pull 2 pin connector off idling speed boost valve -2-.
- Measure resistance at valve.
  Specification: 14 ... 17 ω (at approx. 20 °C)

1.20 - Checking engine temperature sender

Special tools, testers and auxiliary items

- Fault reader V.A.G 1551 or vehicle system tester V.A.G 1552 with cable V.A.G 1551/3
- Hand multimeter V.A.G 1526 or multimeter V.A.G 1715
- Adapter set V.A.G 1594
- Current flow diagram

Test sequence

- Connect fault reader V.A.G 1551 (V.A.G 1552) and with the "Address word" 41 select the Diesel pump electronics control unit. When doing this the engine should be idling.
  (Connecting fault reader and selecting engine electronics control unit => Page 2 .)

-> Indicated on display:

```
Rapid data transfer      HELP
Select function XX
```

- Press keys 0 and 8 for the function "Read measured value block" and confirm entry with Q key.

-> Indicated on display:

```
Read measured value block      HELP
Input display group number XX
```

- Press keys 0 and 1 for "Display group number 01" and confirm entry with Q key.

Protected by copyright. Copying for private or commercial purposes, in part or in whole, is not permitted unless authorised by Volkswagen AG. Volkswagen AG does not guarantee or accept any liability with respect to the correctness of information in this document. Copyright by Volkswagen AG.
satelettronica

-> Indicated on display:
(1...4 = Display zones)

```
Read measured value block      1
     1     2     3     4
```

- Read coolant temperature value in display zone 3.

Display	Cause	Continuation of check
-20 °C	Open circuit or short to positive	=> Page 45
120 °C	Short to earth	=> Page 46
Approx. coolant temperature1)	---	Only if sporadic faults have been detected:2) => Page 46

1) If a temperature is displayed which deviates greatly from the ambient temperature of the sender, check sender wiring for transfer resistances.

2) Check is only possible when the engine is cold.

Continuation of check when display = -20 °C:

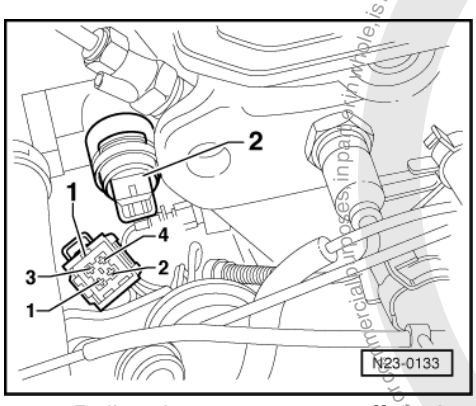

- -> Pull 4 pin connector -1- off engine temperature sender (G27) -2-.
- Bridge connector contacts 1+3 using aux. cables from V.A.G 1594 and observe display.

Display 120 °C:

- Press ⇒key.
- Press keys 0 and 6 for the "End data transfer" function and confirm input with the Q key.
- Switch off ignition.
- Renew engine temperature sender -2-.

Display -20 ° C:

- Press ⇒key.
- Press keys 0 and 6 for the "End data transfer" function and confirm input with the Q key.
- Switch off ignition.
- Check wire between automatic glow period control unit (J179) and 4 pin connector contact 3 for open circuit according to current flow diagram.
  Wire resistance: Max. 1.5 ω
- Check wiring additionally for short circuit to battery positive.
  Specification: ∞ω
- Check wire to 4 pin connector contact 1 for open circuit according to current flow diagram.
  Wire resistance: Max. 1.5 ω

Protected by copyright. Copyright by Volkswagen AG. Volkswagen AG does not guarantee or accept any liability with respect to the correctness of information in this document. Copyright by Volkswagen AG. Protected by copyright. Copying for private or commercial purposes, in part or in whole, is not permitted unless authorised by Volkswagen AG.
satelettronica

If no fault in wire is detected:

- Replace automatic glow period control unit (J179).

Continuation of check when display = 120 °C:

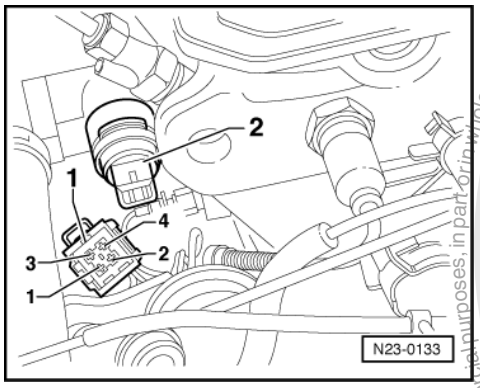

- -> Pull 4 pin connector -1- off engine temperature sender (G27) -2-.

Display -20 ° C:

- Press ⇒key.
- Press keys 0 and 6 for the "End data transfer" function and confirm input with the Q key.
- Switch off ignition.
- Replace engine temperature sender -2-.

Display 120 °C:

- Press ⇒key.
- Press keys 0 and 6 for the "End data transfer" function and confirm input with the Q key.
- Switch off ignition.
- Check wire between automatic glow period control unit (J179) and 4 pin connector contact 3 for short to wire contact 1 and to vehicle earth, according to current flow diagram.
  Specification: ∞ω

If no fault in wire is detected:

- Replace automatic glow period control unit (J179).

Continuation of check when display = coolant temperature:

Functional check of sender

- With engine running observe coolant temperature value in display zone 3. The temperature figure must increase uniformly and without interruption.

Notes:

- If the display on fault reader jumps by 2...5 °C, it is a control unit fault and not caused by a defective sender.
- If irregular engine running occurs in certain temperature ranges and the temperature figure does not increase without interruption, the temperature signal is temporarily interrupted and the sender must be renewed.

- Press ⇒key.
- Press keys 0 and 6 for the "End data transfer" function and confirm input with the Q key.

Protected by copyright. Copying for private or commercial purposes, in part or in whole, is not permitted unless authorised by Volkswagen AG. Volkswagen AG does not guarantee or accept any liability with respect to the correctness of information in this document. Copyright by Volkswagen AG.
satelettronica

1.21 - Resistance figures for engine temperature sender

Temperature	Resistance figure	Temperature	Resistance figure
-20°C	5.40....7.30kω	+20°C	0.922 1.158kω
-15°C	4.30...5.70kω	+60°C	225...265ω
-10°C	3.30...4.30kω	+90°C	96...108ω
-05°C	2.70...3.40kω	+120°C	44.5...50.5ω
0°C	2.13....2.77kω		

1.22 - Vacuum hose connection diagram

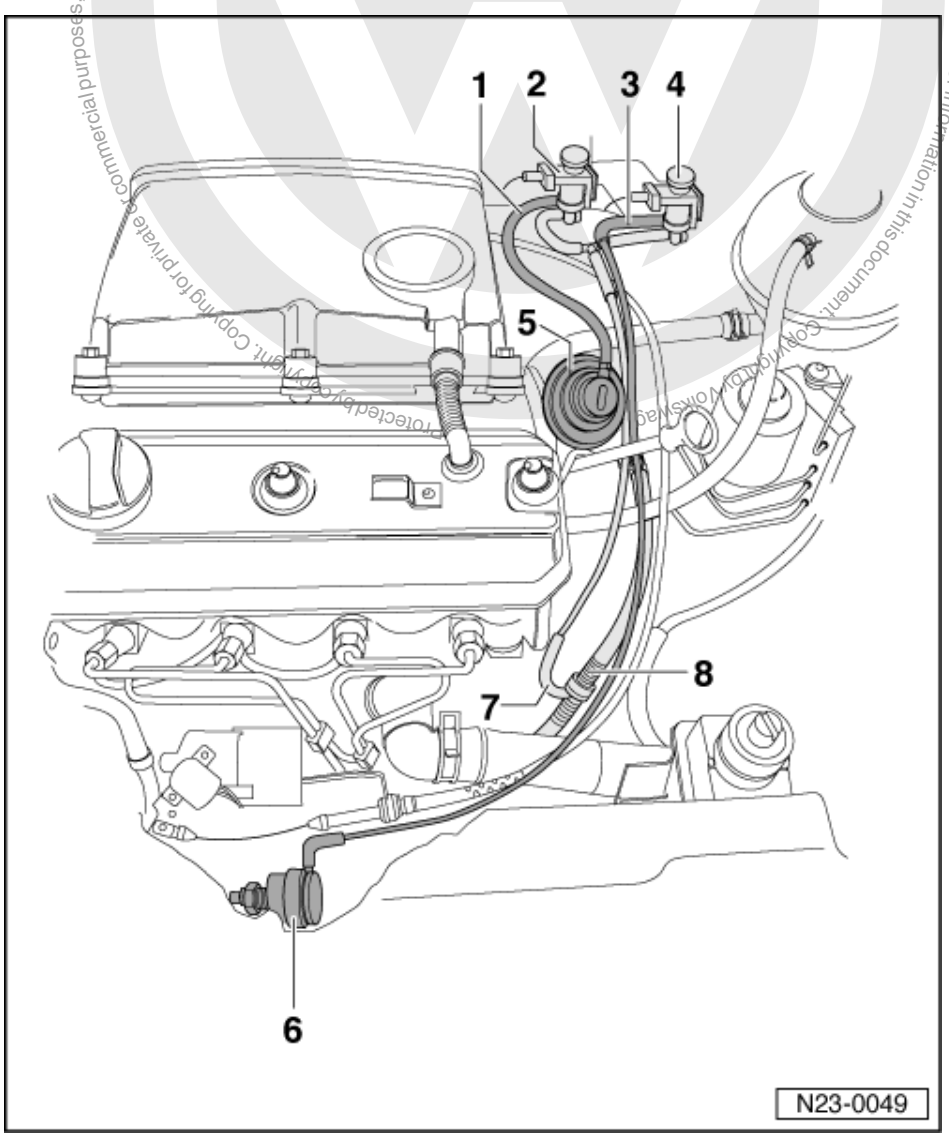

1 Vacuum hose
- To exhaust gas recirculation valve

2 Exhaust gas recirculation valve (N18)

3 Vacuum pipe
- To idling speed boost actuator

4 Idling speed boost valve (N177)

5 Exhaust gas recirculation valve

6 Idling speed boost vacuum unit

satelettronica

7 Vacuum pipe
- On non-return valve

8 Vacuum pipe
- With non-return valve

Protected by copyright. Copying for private or commercial purposes, in part or in whole, is not permitted unless authorised by Volkswagen AG. Volkswagen AG does not guarantee or accept any liability with respect to the correctness of information in this document. Copyright by Volkswagen AG.

satelettronica

28 - Glow plug system

1 - Checking glow plug system

1.1 - Checking glow plug system

Note:

The vehicles are equipped with a door contact switch controlled glow plug system. After entering vehicle and closing the driver's door the glow period starts automatically.

Checking door contact control => Current flow diagram

=> Current flow diagrams, Electrical fault finding and Fitting locations binder

Test prerequisites:

- Battery voltage at least 11.5 V
- Voltage exists at glow plugs. No voltage, locate fault according to current flow diagram.

1.2 - Checking glow plug current consumption

Special tools, testers and auxiliary items

- Multimeter V.A.G 1715 or V.A.G 1315 A

Test sequence

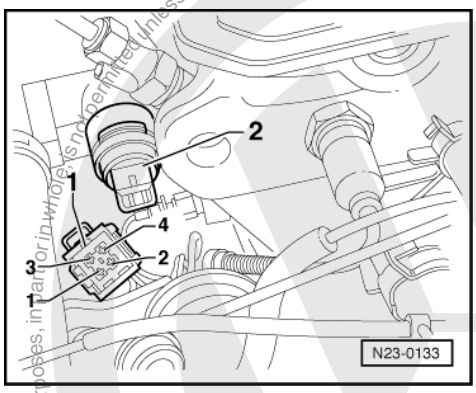

- => Pull connector -1- off engine temperature sender -2-.

Note:

Pulling the connector off sender, simulates engine condition "cold" and when switching the ignition on the relevant glow period is carried out.

- Place glow plug feed wires in multimeter current clamp.
- Switch on ignition to start pre-glow.
- Start the engine and run at idling speed.
- Read current consumption during extended glow period (approx. 180 sec.) with engine running.

Protected by copyright. Copyright by Volkswagen AG.
Copyright by Volkswagen AG. Volkswagen AG does not guarantee or accept any liability with respect to the correctness of information in this document. Copyright by Volkswagen AG. Unless authorised by Volkswagen AG, this document is not to be reproduced or made available to third parties for commercial purposes, in part or in whole.
satelettronica

The current consumption of the glow plugs during the extended glow period is approx. 8 Amp. per glow plug. With a glow plug current consumption of:

Current consumption	Defective glow plug(s)
32 A	0
24 A	1
16 A	2
8 A	3
0 A	4

Note:

Erase fault memory after completing checks

=> Page 6 . (The disconnected engine temperature sender connector is registered as a fault by the self-diagnosis)

1.3 - Checking glow plugs

Special tools, testers and auxiliary items

- Diode test lamp V.A.G 1527
- Adapter set V.A.G 1594

Test sequence

- Remove wiring and busbar for glow plugs.
- Connect diode test lamp wire using auxiliary clips from auxiliary cable set to battery positive (+).
- Place diode test lamp probe on each glow plug one after the other.
  Diode lights up: glow plug OK.
  Diode does not light up: replace glow plug
  (tightening torque: 25 Nm)

Notes:

- The tightening torque of 25 Nm must not be exceeded otherwise the annular gap between glow pin and threaded section will be squeezed together. This may cause the glow plugs to fail prematurely.
- If no fault is found and the engine is still hard to start, the glow plugs should be visually examined whilst glowing (injectors removed).

1.4 - Glow plugs with burned electrodes

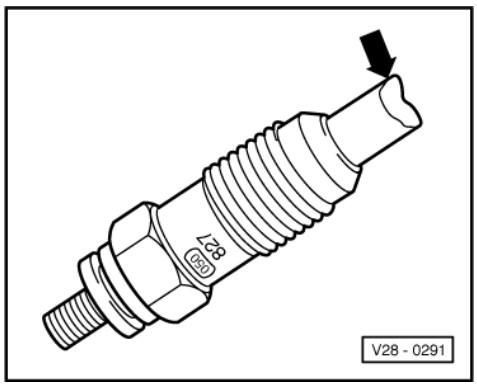

Protected by copyright. Copying for private or commercial purposes, in part or in whole is not permitted unless authorised by Volkswagen AG. Volkswagen AG does not guarantee or accept any liability with respect to the correctness of information in this document. Copyright by Volkswagen AG.
satelettronica

Burned electrodes on glow plugs are frequently caused by faulty injectors. Damage of this nature is not due to faults in or on the glow plugs.

If damage of this nature is found -arrow- it is not sufficient merely to replace the glow plug. The injectors must also be tested for opening pressure and leakage => Page 38 .

Protected by copyright. Copying for private or commercial purposes, in part or in whole, is not permitted unless authorised by Volkswagen AG. Volkswagen AG does not guarantee or accept any liability with respect to the correctness of information in this document. Copyright by Volkswagen AG.

satelettronica